DRAWING NO.	REVISION	DESCRIPTION
1294P–E01–01	0	MASTER DRAWING LIST
1294P–E01–02	0	SYMBOLS
1294P–E01–03	0	ELECTRICAL ONE LINE DIAGRAM
1294P–E01–04	0	DATA COMMUNICATION DIAGRAM
1294P–E02–01	0	PLC PANEL CABINET LAYOUT
1294P–E02–02	0	PLC PANEL LAYOUT
1294P–E02–03	0	PLC PANEL SCHEMATIC – SHEET 1
1294P–E02–04	0	PLC PANEL SCHEMATIC – SHEET 2
1294P–E02–05	0	PLC PANEL SCHEMATIC – SHEET 3
1294P–E02–06	0	PLC PANEL SCHEMATIC – SHEET 4
1294P–E02–07	0	PLC PANEL SCHEMATIC – SHEET 5
1294P–E02–08	0	PLC PANEL SCHEMATIC – SHEET 6
1294P–E02–09	0	PLC PANEL SCHEMATIC – SHEET 7
1294P–E02–10	0	PLC PANEL SCHEMATIC – SHEET 8
1294P–E02–11	0	PLC PANEL SCHEMATIC – SHEET 9
1294P–E02–12	0	PLC PANEL SCHEMATIC – SHEET 10
1294P–E02–13	0	PLC PANEL SCHEMATIC – SHEET 11
1294P–E02–14	0	PLC PANEL SCHEMATIC – SHEET 12
1294P–E02–15	0	PLC PANEL FUTURE
1294P–E02–16	0	PLC PANEL FUTURE
1294P–E02–17	0	PLC PANEL BILL OF MATERIAL
1294P–E02–18	0	PLC PANEL INTERCONNECTION W/D – SHEET 1
1294P–E02–19	0	PLC PANEL INTERCONNECTION W/D – SHEET 2
1294P–E02–20	0	PLC PANEL INTERCONNECTION W/D – SHEET 3
1294P–E02–21	0	PLC PANEL CABLE LISTING
1294P–E03–01	0	HEATER PANEL CABINET LAYOUT
1294P–E03–02	0	HEATER PANEL PANEL LAYOUT
1294P–E03–03	0	HEATER PANEL SCHEMATIC – SHEET 1
1294P–E03–04	0	HEATER PANEL SCHEMATIC – SHEET 2
1294P–E03–05	0	HEATER PANEL FUTURE
1294P–E03–06	0	HEATER PANEL BILL OF MATERIAL
1294P–E03–07	0	HEATER PANEL INTERCONNECTION W/D
1294P–E03–08	0	HEATER PANEL CABLE LISTING

DRAWING NO.	REVISION	DESCRIPTION
1294P–E04–01	0	BLOWER PANEL CABINET LAYOUT
1294P–E04–02	0	BLOWER PANEL PANEL LAYOUT
1294P–E04–03	0	BLOWER PANEL SCHEMATIC – SHEET 1
1294P–E04–04	0	BLOWER PANEL FUTURE
1294P–E04–05	0	BLOWER PANEL BILL OF MATERIAL
1294P–E04–06	0	BLOWER PANEL INTERCONNECTION W/D
1294P–E04–07	0	BLOWER PANEL CABLE LISTING

NO.	DATE	REVISIONS	DRAWN BY	CHECKED BY
0	2/12/23	RELEASE FOR CONSTRUCTION	ARM	FJS

FUEL TECH
Technologies to enable clean efficient energy
FUEL TECH, INC. 27601 BELLA VISTA PKWY, WARRENVILLE, IL 60555

UC DAVIS MEDICAL CENTER
SACRAMENTO, CA

ULTRA 20 CONTROL PANEL
DRAWING LIST

APPROVED BY: SMM
CHECKED BY: FJS
DRAWN BY: JMA
DATE: 8/5/22
SCALE: NONE
SIZE: D
DRAWING NO. 1294P–E01–01

THREE PHASE DISCONNECT SWITCH

GROUND FAULT INTERRUPTED CIRCUIT BREAKER

CABLE PIN CONNECTION (EXAMPLE SHOWS PIN 1)

CIRCUIT BREAKER

FUSE

THREE PHASE MOTOR PROTECTOR WITH ADJUSTABLE SOLID STATE SHORT CIRCUIT/OVERLOAD PROTECTION

GROUND INDICATES CONNECTION TO GROUND BAR

ISOLATED AND DEDICATED INSTRUMENT GROUND FOR SHIELDS

RECP103

RECEPTACLE

THREE PHASE MOTOR

TRANSFORMER

OPEN (8) (6) (7)
CLOSED (11) (9) (10)

AIR OPERATED VALVE

PILOT LIGHT

THREE-PRONG PLUG

RELAY OR CONTACTOR COIL

NORMALLY OPEN CONTACT

NORMALLY CLOSED CONTACT

RESISTOR

MUSHROOM HEAD PUSHBUTTON – NORMALLY CLOSED

PUSHBUTTON – NORMALLY OPEN

PUSHBUTTON – NORMALLY CLOSED

TWO POSITION SELECTOR SWITCH

THREE POSITION SELECTOR SWITCH

NORMALLY CLOSED PRESSURE SWITCH – OPENS ON RISING PRESSURE

NORMALLY OPEN PRESSURE SWITCH – CLOSES ON RISING PRESSURE

NORMALLY OPEN HELD CLOSED PRESSURE SWITCH – OPENS ON FALLING PRESSURE

PROCESS SIGNAL FROM FIELD (REMOTE)

315 SCHEMATIC DESTINATION LINE REFERENCE

3/15 SCHEMATIC LINE REFERENCE

PUMP

HEATER

NORMALLY OPEN TIMED CLOSE TIMER RELAY CONTACT

NORMALLY OPEN TIMED OPEN TIMER RELAY CONTACT

NORMALLY OPEN TEMPERATURE SWITCH – CLOSES ON RISING TEMPERATURE

NORMALLY CLOSED HELD OPEN TEMPERATURE SWITCH – CLOSES ON FALLING TEMPERATURE

SOLENOID VALVE

SNK / SRC DIP SWITCH

DIODE

LIMIT SWITCH NORMALLY OPEN

LIMIT SWITCH NORMALLY OPEN HELD CLOSED

LIMIT SWITCH NORMALLY CLOSED

LIMIT SWITCH NORMALLY CLOSED HELD OPEN

FLOW SWITCH NORMALLY OPEN

2-POLE RELAY TERMINAL DIAGRAM

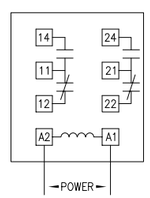

ALLEN-BRADLEY PART NO.: 700-HK32XX-4

1-POLE RELAY TERMINAL DIAGRAM

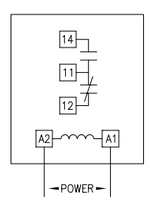

ALLEN-BRADLEY PART NO.: 700-HK36XX-4

CONTROL RELAY CROSS-REFERENCE

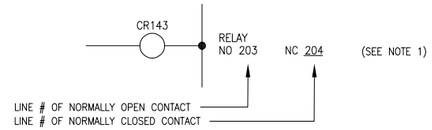

NOTE 1: NUMBER DISPLAYED NEXT TO RELAYS WITHIN THE TEXT DESCRIPTION REFERS TO THE LINE NUMBERS THAT IDENTIFY THE LOCATION OF THE AUXILIARY CONTACTS. THESE CROSS REFERENCES ALWAYS REFER TO LOCATIONS ON THE SCHEMATIC DRAWINGS OF THE CURRENT PANEL. IF MORE THAN ONE SCHEMATIC DRAWING EXISTS FOR A PARTICULAR PANEL THEN 100 SERIES NUMBERS REFER TO SHEET 1, 200 SERIES NUMBERS REFER TO SHEET 2, ETC.

CABLE CODE IDENTIFICATION

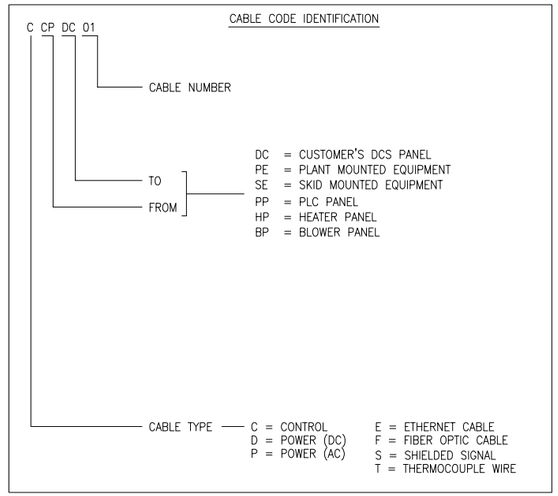

WIRE TYPE

MTW (MACHINE TOOL WIRE) – COPPER WIRE WITH PVC OR PVC/NYLON THERMOPLASTIC INSULATION RATED 600V & 60C (194F) DRY LOCATION.

BELDEN #8719 FOR 1 PAIR/2 CONDUCTOR #16 SHIELDED CABLE WITH POLYETHYLENE INSULATION AND PVC JACKET RATED 300V & 60C (140F).

BELDEN #8618 FOR 3 CONDUCTORS #16 SHIELDED CABLE WITH POLYETHYLENE INSULATION AND PVC JACKET RATED 300V & 60C (140F).

WIRE SIZES

POWER – MOTORS/HEATERS – #12 MINIMUM
CONTROL – #14 MINIMUM OR EQUIPMENT MANUFACTURER'S RECOMMENDATION.
SIGNAL – #16 MINIMUM.

WIRE COLORS

GREEN W/YELLOW STRIP – EQUIPMENT GROUNDING CONDUCTOR
WHITE – GROUNDED AC
RED – UNGROUNDED AC (120VAC)
BLACK – UNGROUNDED HIGH VOLTAGE (230VAC, 480VAC, DC MOTOR FIELD & ARMATURE)
WHITE W/BLUE STRIP – GROUNDED DC
BLUE – UNGROUNDED DC
ORANGE OR YELLOW– UNGROUNDED CONDUCTORS THAT REMAIN ENERGIZED WHEN THE MAIN DISCONNECT IS OFF.
SHIELDED SIGNAL CABLE – BLACK (–), CLEAR (+) OR BLACK (–), RED (+)
T/C – RED (–), OTHER COLOR (+)
RTD – RED (SIGNAL), BLACK (–), CLEAR (+)

SCHEMATIC TAGS

AC	AIR CONDITIONER
AH	ALARM HORN
ATF	FILTER
CB	CIRCUIT BREAKER
CON	CONTACTOR
CR	CONTROL RELAY
DS	DISCONNECT SWITCH
ES	ETHERNET SWITCH
FIT	FLOW INDICATING TRANSMITTER
FS	FLOW SWITCH
FT	FLOW TRANSMITTER
FU	FUSE
HTR	HEATER
LIT	LEVEL INDICATING TRANSMITTER
LS	LIMIT SWITCH
LT	LIGHT
M	MOTOR
MOV	MOTOR OPERATED VALVE
MP	MOTOR PROTECTOR
OIT	OPERATOR INTERFACE TERMINAL
PB	PUSHBUTTON
PBLT	ILLUMINATED PUSHBUTTON
PCV	PRESSURE CONTROL VALVE
PDB	POWER DISTRIBUTION BLOCK
PLC	PLC COMPONENT
PIT	PRESSURE INDICATING TRANSMITTER
PS	POWER SUPPLY
PS	PRESSURE SWITCH
PT	PRESSURE TRANSMITTER
PV	PANELVIEW
RECP	RECEPTACLE
SOL	SOLENOID VALVE
SS	SELECTOR SWITCH
ST	FLAME SCANNER
SUP	SURGE SUPPRESSSOR
T / XF	TRANSFORMER
TB	TERMINAL BLOCK
T/C	THERMOCOUPLE
TR	TIME DELAY RELAY
TIT	TEMPERATURE INDICATING TRANSMITTER
TS	TEMPERATURE SWITCH
VFD	VARIABLE FREQUENCY DRIVE
V	VALVE

MASTER TERMINAL BLOCK LEGEND

– TERMINAL BLOCK

LEGEND

INDICATES REMOTELY MOUNTED EQUIPMENT

NO.	DATE	REVISIONS	DRAWN BY	CHECKED BY
0	2/12/23	RELEASE FOR CONSTRUCTION	ARM	FJS

FUEL TECH
Technologies to enable clean efficient energy
FUEL TECH, INC. 27601 BELLA VISTA PKWY, WARRENVILLE, IL 60555

UC DAVIS MEDICAL CENTER
SACRAMENTO, CA

ULTRA 20 CONTROL PANEL
SYMBOLS

APPROVED BY: SMM
CHECKED BY: FJS
DRAWN BY: JMA
DATE: 8/5/22
SCALE: NONE
SIZE: D
DRAWING NO. 1294P–E01–02

FRONT VIEW

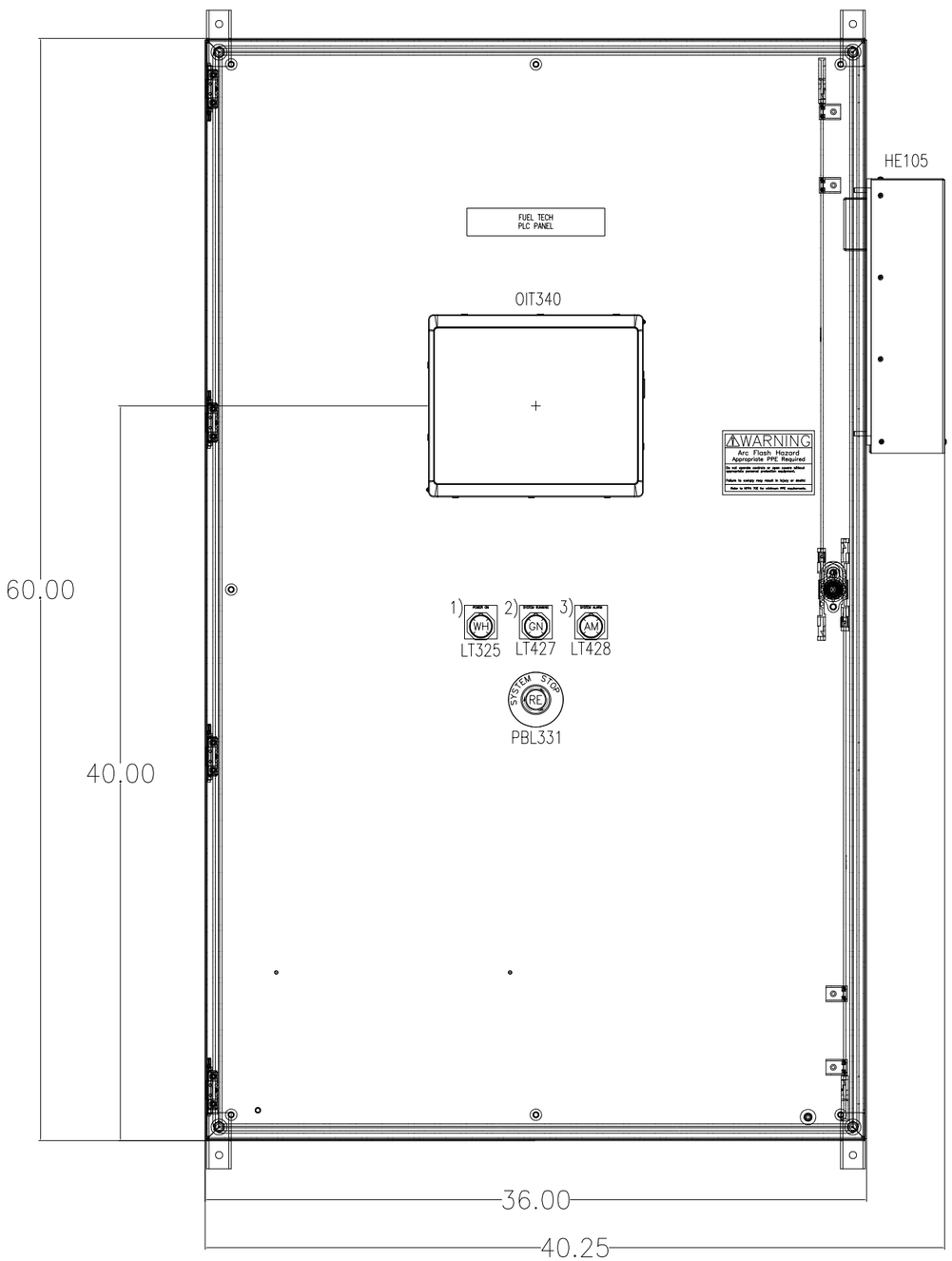

RIGHT SIDE VIEW

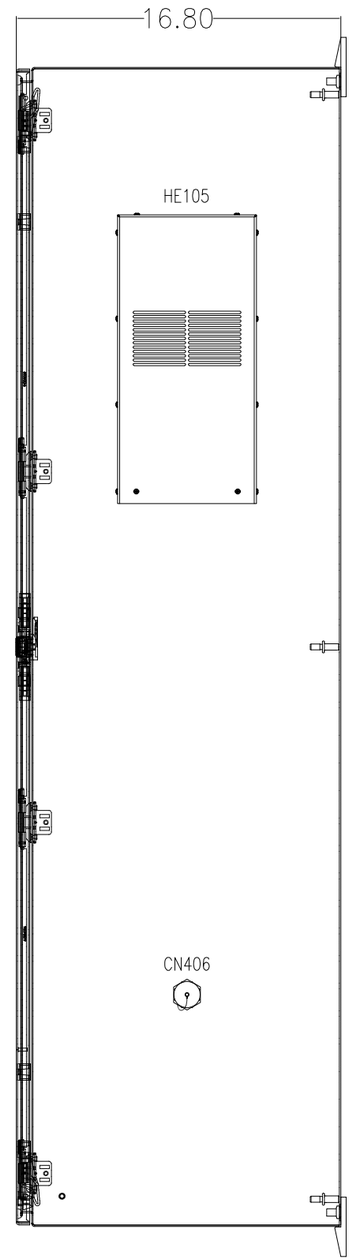

THT-19-413-1-PR

The Industrial Controls Company, Inc.
BETTER THINKING. INSIDE THE BOX.
N56 W24842 Corporate Circle Sussex, WI 53089

120 VOLTS N/A FLA (LARGEST MOTOR)
60 CYCLES 9.1 FLA (TOTAL)
1 PHASE 1294P-E02 DRWG. NO.
TYPE 4 ENCLOSURE

Fuse ID	Mfg.	Fuse# or Equivalent	Volts
FU502-642	BUSSMANN	AGC-1/2-R	250
FU429-433	BUSSMANN	MDL-2-R	250

USE COPPER CONDUCTORS ONLY

PART ID	PART NUMBER	TORQUE (IN/LB)	TEMP (C)
CB103	1489-M1C300	17.7	90
TB's	1492-J4	9.0	90
TB's	1492-J04	9.0	90
TB's	1492-JTC3K	3.5-5.3	90
TB's	1492-JG3	4.5-7.1	90
GND BAR	PK12GTA	20 (14-10GA)	90
GND BAR	PK12GTA	25 (8GA)	90
GND BAR	PK12GTA	35 (6-4GA)	90

USE COPPER CONDUCTORS ONLY

PART ID	PART NUMBER	TORQUE (IN/LB)	TEMP (C)
GND LUG	L70	35 (14-10GA)	90
GND LUG	L70	40 (8GA)	90
GND LUG	L70	45 (4-6GA)	90

THT-19-435-1-HFC

WARNING

RISK OF FIRE OR ELECTRICAL SHOCK

THE OPENING OF THE BRANCH-CIRCUIT PROTECTIVE DEVICE MAY BE AN INDICATION THAT A FAULT CURRENT HAS BEEN INTERRUPTED. ALL CURRENT- CARRYING PARTS AND OTHER COMPONENTS PROTECTED BY THIS DEVICE SHOULD BE EXAMINED AND REPLACED IF DAMAGED. IF BURNOUT OF A CURRENT ELEMENT OF AN OVERLOAD RELAY OCCURS, THE COMPLETE OVERLOAD RELAY MUST BE REPLACED.

99454

WARNING

Arc Flash Hazard
Appropriate PPE Required

Do not operate controls or open covers without appropriate personal protection equipment.

Failure to comply may result in injury or death!

Refer to NFPA 70E for minimum PPE requirements.

NAMEPLATE SCHEDULE

LAM-7.50-1.50-902

FUEL TECH
PLC PANEL

LP-30MM-ESTOP

LP-30MM-902

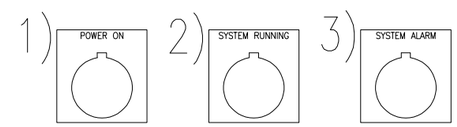

NOTES:
1) CENTERLINE OF HMI (OIT340) IS 52" ABOVE GRADE.

NO.	DATE	REVISIONS	DRAWN BY	CHECKED BY
0	2/12/23	RELEASE FOR CONSTRUCTION	ARM	FJS

FUEL TECH
Technologies to enable clean efficient energy
FUEL TECH, INC. 27601 BELLA VISTA PKWY, WARRENVILLE, IL 60555

UC DAVIS MEDICAL CENTER
SACRAMENTO, CA

PLC PANEL
CABINET LAYOUT

APPROVED BY: SMM
CHECKED BY: FJS
DRAWN BY: JMA
DATE: 8/5/22
SCALE: NONE
SIZE: D
DRAWING NO. 1294P-E02-01

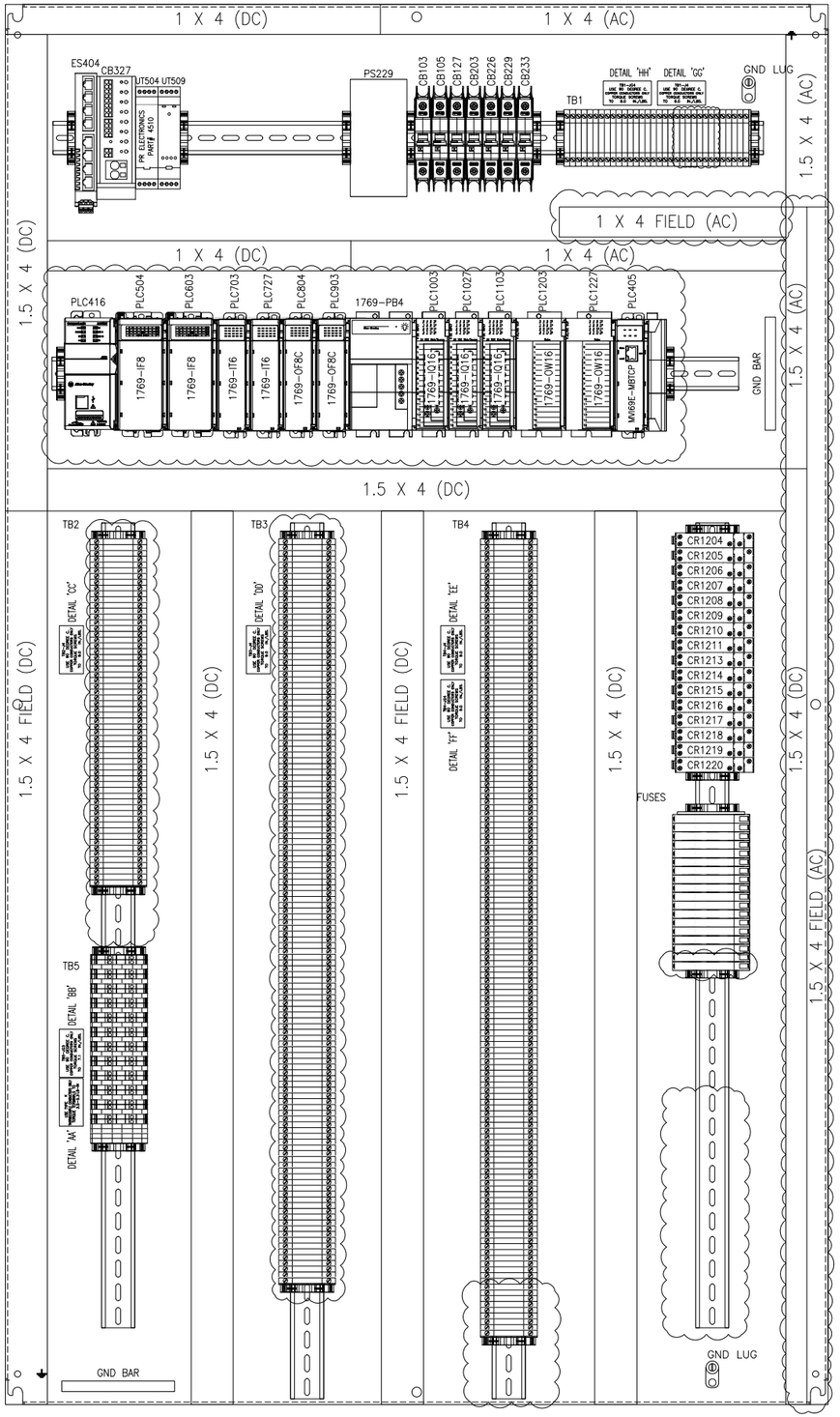

DETAIL 'AA'

USE TYPE K THERMOCOUPLE CONDUCTORS ONLY
TORQUE TERMINALS TO 3.5–5.3 LB–IN

DETAIL 'BB'

TB5–JG3
USE 90 DEGREE C. COPPER CONDUCTORS ONLY
TORQUE SCREWS TO 7.1 IN./LBS.

DETAIL 'CC'

TB2–J4
USE 90 DEGREE C. COPPER CONDUCTORS ONLY
TORQUE SCREWS TO 9.0 IN./LBS.

DETAIL 'DD'

TB3–J4
USE 90 DEGREE C. COPPER CONDUCTORS ONLY
TORQUE SCREWS TO 9.0 IN./LBS.

DETAIL 'EE'

TB4–J4
USE 90 DEGREE C. COPPER CONDUCTORS ONLY
TORQUE SCREWS TO 9.0 IN./LBS.

DETAIL 'FF'

TB4–JG4
USE 90 DEGREE C. COPPER CONDUCTORS ONLY
TORQUE SCREWS TO 9.0 IN./LBS.

DETAIL 'GG'

TB1–J4
USE 90 DEGREE C. COPPER CONDUCTORS ONLY
TORQUE SCREWS TO 9.0 IN./LBS.

DETAIL 'HH'

TB1–JG4
USE 90 DEGREE C. COPPER CONDUCTORS ONLY
TORQUE SCREWS TO 9.0 IN./LBS.

FUSES
FU429
FU430
FU431
FU432
FU433
FU502
FU507
FU514
FU519
FU527
FU532
FU537
FU542
FU603
FU608
FU613
FU618
FU1109
18 @ 1492-H5

	120VAC TB1
1	1041
2	1041
3	1041
4	1041
5	1041
6	N
7	N
8	N
9	N
10	1051
11	N
12	GND
13	1271
14	N
15	GND
16	2031
17	N
18	GND
19	2261
20	4381
21	4391
22	4401
23	4411
24	4421
25	4431
26	4441
27	4451
28	SPARE
29	SPARE
30	SPARE
31	SPARE
32	SPARE

29 @ 1492-J4
*3 @ 1492-JG4

	24VDC TB2
1	2332
2	2332
3	2332
4	2332
5	2332
6	2333
7	2333
8	2333
9	2333
10	2333
11	2333
12	2333
13	2333
14	2333
15	2333
16	2333
17	2333
18	2333
19	2333
20	2333
21	2333
22	2333
23	2333
24	2333
25	2333
26	2333
27	2333
28	2333
29	2333
30	2333
31	2333
32	2333
33	2333
34	2333
35	2333
36	2333
37	2333
38	3271
39	3271
40	3401
41	4271
42	4281
43	4292
44	4302
45	4312
46	4322
47	4332
48	4341
49	4351
50	4361
51	4371
52	SPARE
53	SPARE
54	SPARE
55	SPARE
56	SPARE
57	SPARE
58	SPARE
59	SPARE
60	SPARE

60 @ 1492-J4

	DIGITAL TB3		DIGITAL TB3 CONT.
1	3311	66	I08/04
2	3311	67	I08/05
3	3311	68	I08/06
4	3311	69	I08/07
5	3311	70	I08/08
6	3311	71	I08/09
7	3311	72	I08/10
8	3311	73	I08/11
9	3311	74	I08/12
10	3311	75	I08/13
11	3311	76	I08/14
12	3311	77	I08/15
13	3311	78	I09/00
14	3311	79	I09/01
15	3311	80	I09/02
16	3311	81	I09/03
17	3311	82	I09/04
18	3311	83	I09/05
19	3311	84	I09/06
20	3311	85	I09/07
21	3311	86	I09/08
22	3311	87	I09/09
23	3311	88	I09/10
24	3311	89	I09/11
25	3311	90	I09/12
26	3311	91	I09/13
27	3311	92	I09/14
28	3311	93	I09/15
29	3311	94	O10/08
30	3311	95	O11/00
31	3311	96	O11/01
32	3311	97	O11/02
33	3311	98	O11/03
34	3311	99	O11/04
35	3311	100	O11/05
36	3311	101	O11/06
37	3311	102	O11/07
38	3311	103	O11/08
39	3311	104	O11/09
40	3311	105	O11/10
41	3311	106	O11/11
42	3311	107	O11/12
43	3311	108	O11/13
44	3311	109	O11/14
45	3361	110	O11/15
46	I07/00	111	12131
47	I07/01	112	SPARE
48	I07/02	113	SPARE
49	I07/03	114	SPARE
50	I07/04	115	SPARE
51	I07/05	116	SPARE
52	I07/06	117	SPARE
53	I07/07	118	SPARE
54	I07/08	119	SPARE
55	I07/09	120	SPARE
56	I07/10	121	SPARE
57	I07/11	122	SPARE
58	I07/12	123	SPARE
59	I07/13	124	SPARE
60	I07/14	125	SPARE
61	I07/15	126	SPARE
62	I08/00	127	SPARE
63	I08/01	128	SPARE
64	I08/02	129	SPARE
65	I08/03	130	SPARE

130 @ 1492-J4

	ANALOG TB4		ANALOG TB4 CONT.
1	5051	86	O05/5+
2	5061	87	O05/5-
3	SHLD	**	88 SHLD
4	5101	89	O05/6+
5	5111	90	O05/6-
6	SHLD	**	91 SHLD
7	5141	92	O05/7+
8	I01/2+	93	O05/7-
9	I01/2-	94	SHLD
10	2333	95	O06/0+
11	SHLD	**	96 O06/0-
12	5191	97	SHLD
13	I01/3+	98	O06/1+
14	I01/3-	99	O06/1-
15	2333	100	SHLD
16	SHLD	**	101 O06/2+
17	5271	102	O06/2-
18	I01/4+	103	SHLD
19	I01/4-	104	O06/3+
20	2333	105	O06/3-
21	SHLD	**	106 SHLD
22	5321	107	O06/4+
23	I01/5+	108	O06/4-
24	I01/5-	109	SHLD
25	2333	110	O06/5+
26	SHLD	**	111 O06/5-
27	5371	112	SHLD
28	I01/6+	113	O06/6+
29	I01/6-	114	O06/6-
30	2333	115	SHLD
31	SHLD	**	116 O06/7+
32	5421	117	O06/7-
33	I01/7+	118	SHLD
34	I01/7-	119	SPARE
35	2333	120	SPARE
36	SHLD	**	121 SHLD
37	6031	122	SPARE
38	I02/0+	123	SPARE
39	I02/0-	124	SHLD
40	2333	125	SPARE
41	SHLD	**	126 SPARE
42	6081	127	SHLD
43	I02/1+	128	SPARE
44	I02/1-	129	SPARE
45	2333	130	SHLD
46	SHLD	**	131 SPARE
47	6131	132	SPARE
48	I02/2+	133	SHLD
49	I02/2-	134	SPARE
50	2333	135	SPARE
51	SHLD	**	136 SHLD
52	6181	137	SPARE
53	I02/3+	138	SPARE
54	I02/3-		
55	2333		
56	SHLD	**	
57	I02/4+		
58	I02/4-		
59	SHLD		
60	I02/5+	**	
61	I02/5-		
62	SHLD		
63	I02/6+		
64	I02/6-	**	
65	SHLD		
66	I02/7+		
67	I02/7-		
68	SHLD	**	
69	O05/0+		
70	O05/0-		
71	8081		
72	SHLD	**	
73	O05/1+		
74	O05/1-		
75	8121		
76	SHLD	**	
77	O05/2+		
78	O05/2-		
79	SHLD		
80	O05/3+	**	
81	O05/3-		
82	SHLD		
83	O05/4+	**	
84	O05/4-		
85	SHLD		

100 @ 1492-J4
**38 @ 1492-JG4

	T/C TB5	
1	I03/0+	**
	I03/0-	**
2	SHLD	***
3	I03/1+	**
	I03/1-	**
4	SHLD	***
5	I03/2+	**
	I03/2-	**
6	SHLD	***
7	I03/3+	**
	I03/3-	**
8	SHLD	***
9	I03/4+	**
	I03/4-	**
10	SHLD	***
11	I03/5+	**
	I03/5-	**
12	SHLD	***
13	I04/0+	**
	I04/0-	**
14	SHLD	***
15	I04/1+	**
	I04/1-	**
16	SHLD	***
17	I04/2+	**
	I04/2-	**
18	SHLD	***
19	I04/3+	**
	I04/3-	**
20	SHLD	***
21	I04/4+	**
	I04/4-	**
22	SHLD	***
23	I04/5+	**
	I04/5-	**
24	SHLD	***
25	SHLD	***
26	SHLD	***
27	SHLD	***

**12 @ 1492-JTC3K
***15@ 1492-JG3

NO.	DATE	REVISIONS	DRAWN BY	CHECKED BY
0	2/12/23	RELEASE FOR CONSTRUCTION	ARM	FJS

FUEL TECH
Technologies to enable clean efficient energy
FUEL TECH, INC. 27601 BELLA VISTA PKWY, WARRENVILLE, IL 60555

UC DAVIS MEDICAL CENTER
SACRAMENTO, CA

PLC PANEL
PANEL LAYOUT

APPROVED BY: SMM
CHECKED BY: FJS
DRAWN BY: JMA
DATE: 8/5/22
SCALE: NONE
SIZE: D
DRAWING NO. 1294P–E02–02

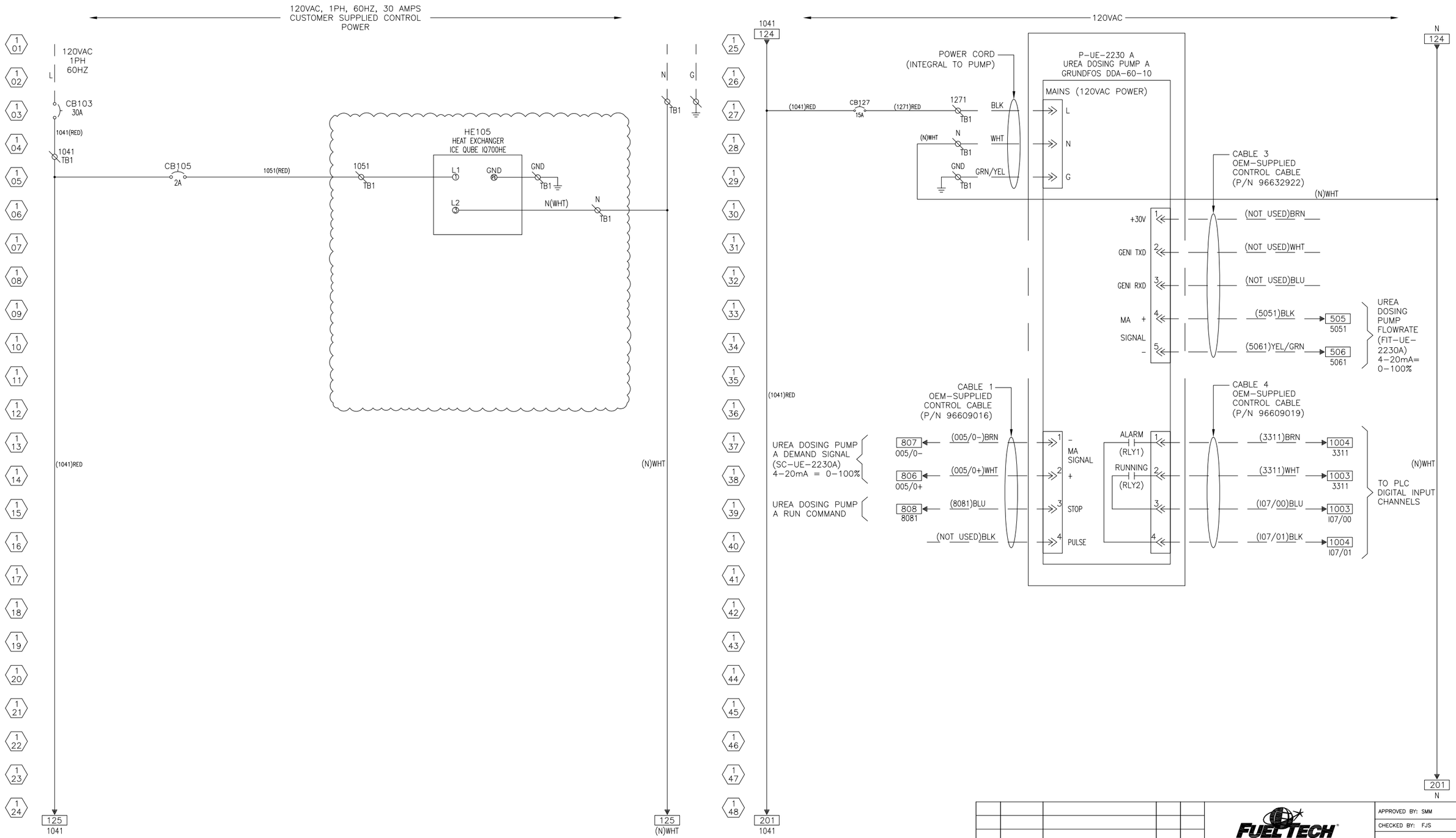

NO.	DATE	REVISIONS	DRAWN BY	CHECKED BY
0	2/12/23	RELEASE FOR CONSTRUCTION	ARM	FJS

FUEL TECH
Technologies to enable clean efficient energy
FUEL TECH, INC. 27601 BELLA VISTA PKWY, WARRENVILLE, IL 60555

UC DAVIS MEDICAL CENTER
SACRAMENTO, CA

PLC PANEL
SCHEMATIC SHEET 1 OF 12

APPROVED BY: SMM
CHECKED BY: FJS
DRAWN BY: JMA
DATE: 8/5/22
SCALE: NONE
SIZE: D
DRAWING NO. 1294P-E02-03

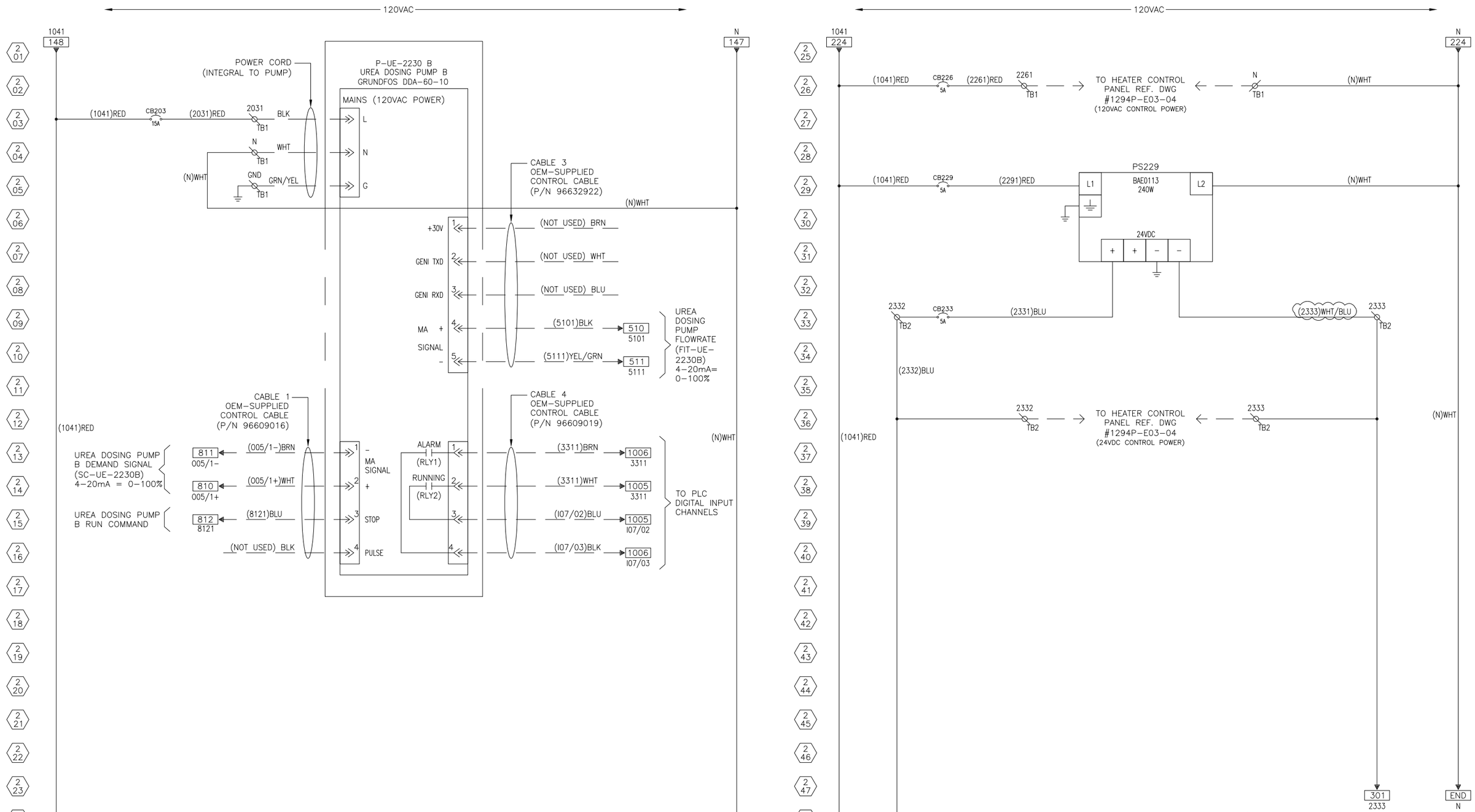

NO.	DATE	REVISIONS	DRAWN BY	CHECKED BY
0	2/12/23	RELEASE FOR CONSTRUCTION	ARM	FJS

FUEL TECH
Technologies to enable clean efficient energy
FUEL TECH, INC. 27601 BELLA VISTA PKWY, WARRENVILLE, IL 60555

UC DAVIS MEDICAL CENTER
SACRAMENTO, CA

PLC PANEL
SCHEMATIC SHEET 2 OF 12

APPROVED BY: SMM
CHECKED BY: FJS
DRAWN BY: JMA
DATE: 8/5/22
SCALE: NONE
SIZE: D
DRAWING NO.
1294P-E02-04

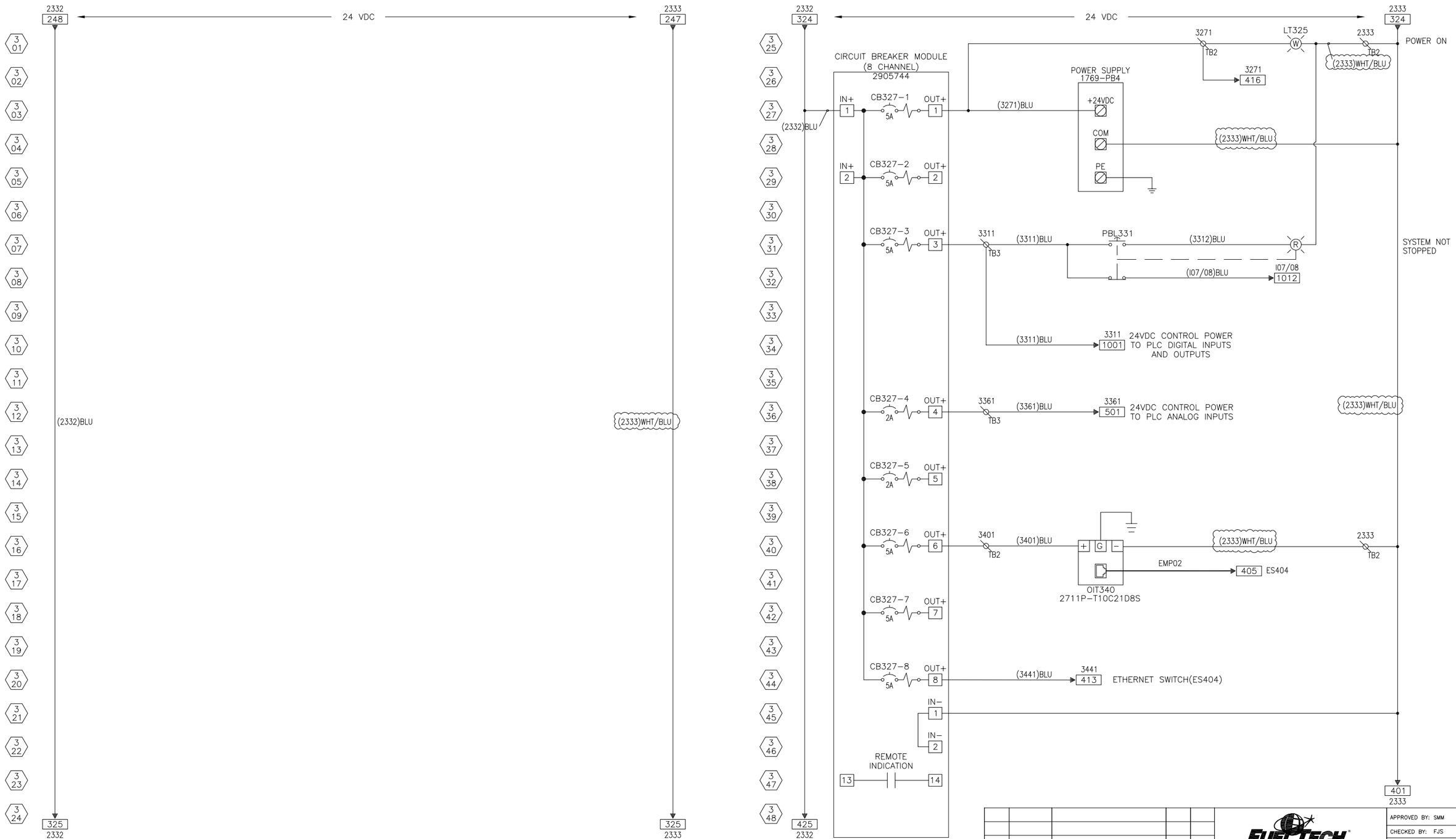

NO.	DATE	REVISIONS	DRAWN BY	CHECKED BY
0	2/12/23	RELEASE FOR CONSTRUCTION	ARM	FJS

FUEL TECH
Technologies to enable clean efficient energy
FUEL TECH, INC. 27601 BELLA VISTA PKWY, WARRENVILLE, IL 60555

UC DAVIS MEDICAL CENTER
SACRAMENTO, CA

PLC PANEL
SCHEMATIC SHEET 3 OF 12

APPROVED BY: SMM
CHECKED BY: FJS
DRAWN BY: JMA
DATE: 8/5/22
SCALE: NONE
SIZE: D
DRAWING NO.
1294P-E02-05

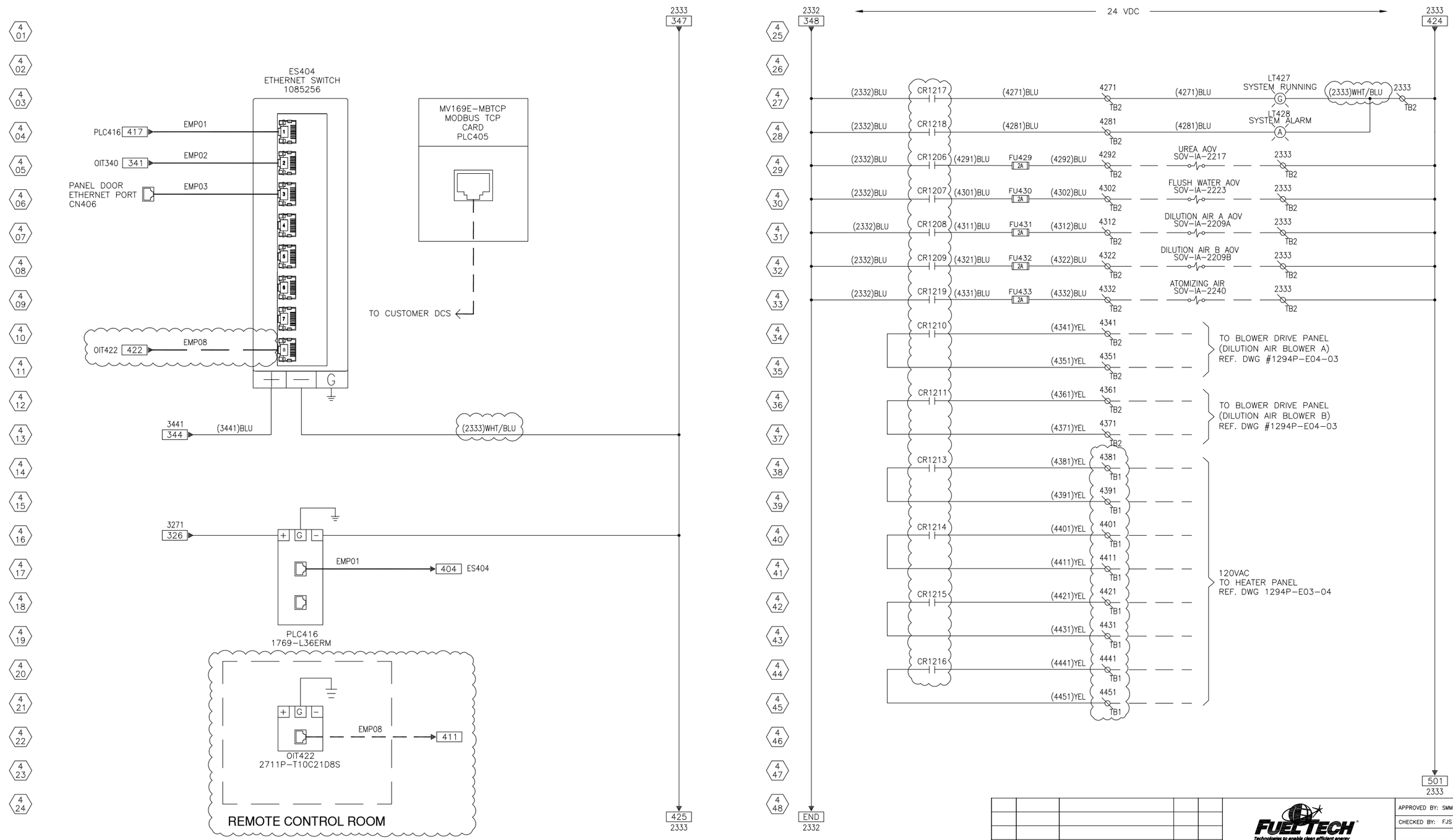

NO.	DATE	REVISIONS	DRAWN BY	CHECKED BY
0	2/12/23	RELEASE FOR CONSTRUCTION	ARM	FJS

FUEL TECH
Technologies to enable clean efficient energy
FUEL TECH, INC. 27601 BELLA VISTA PKWY, WARRENVILLE, IL 60555

UC DAVIS MEDICAL CENTER
SACRAMENTO, CA

PLC PANEL
SCHEMATIC SHEET 4 OF 12

APPROVED BY: SMM
CHECKED BY: FJS
DRAWN BY: JMA
DATE: 8/5/22
SCALE: NONE
SIZE: D
DRAWING NO.
1294P-E02-06

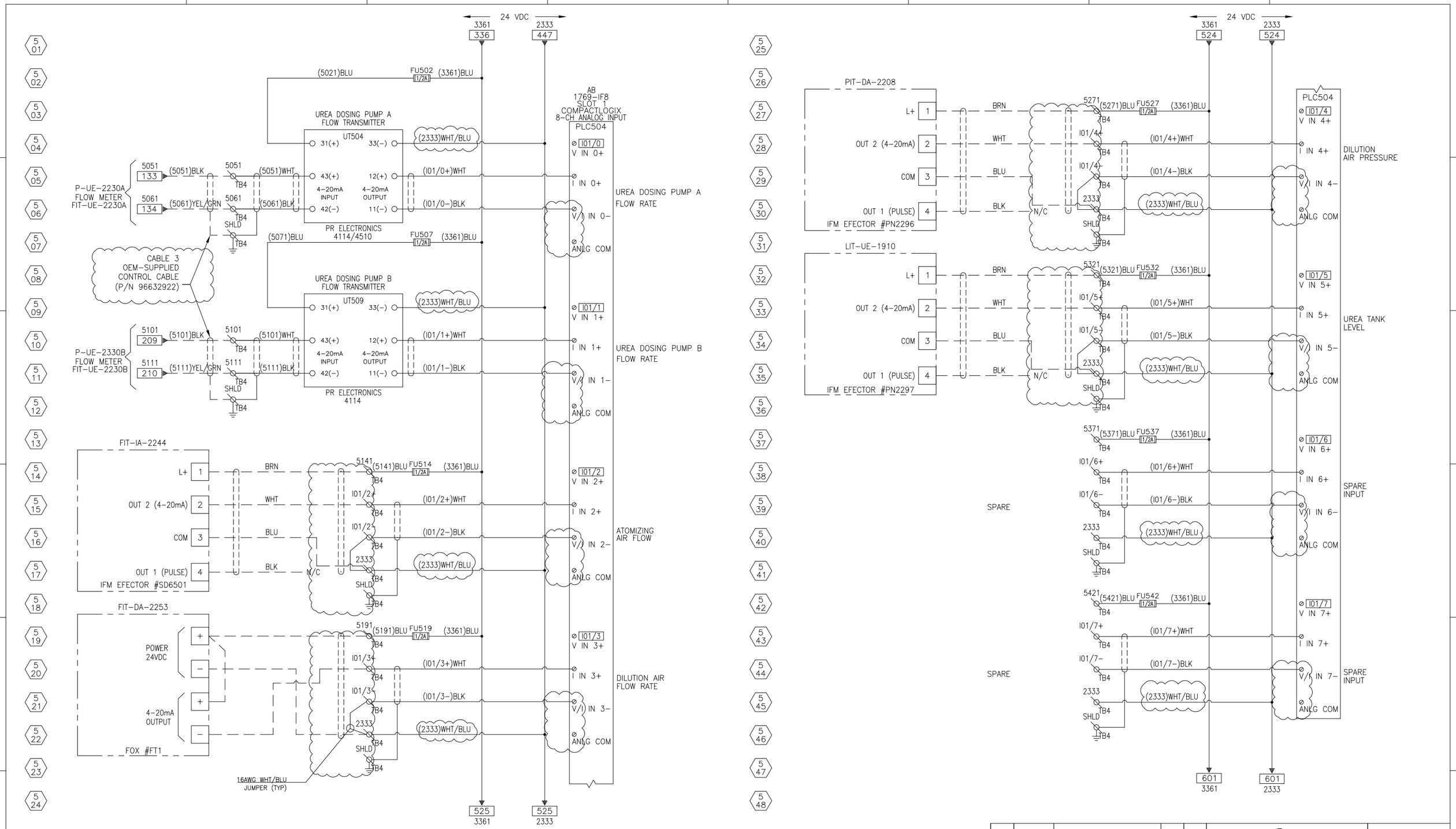

ELECTRICAL CONDUCTOR DESIGNATIONS

————	INTERNAL TO CONTROL PANEL
— — — —	EXTERNAL TO CONTROL PANEL

NO.	DATE	REVISIONS	DRAWN BY	CHECKED BY
0	2/12/23	RELEASE FOR CONSTRUCTION	ARM	FJS

FUEL TECH
Technologies to enable clean efficient energy
FUEL TECH, INC. 27601 BELLA VISTA PKWY, WARRENVILLE, IL 60555

UC DAVIS MEDICAL CENTER
SACRAMENTO, CA

PLC PANEL
SCHEMATIC SHEET 5 OF 12

APPROVED BY: SMM
CHECKED BY: FJS
DRAWN BY: JMA
DATE: 8/5/22
SCALE: NONE
SIZE: D
DRAWING NO.
1294P-E02-07

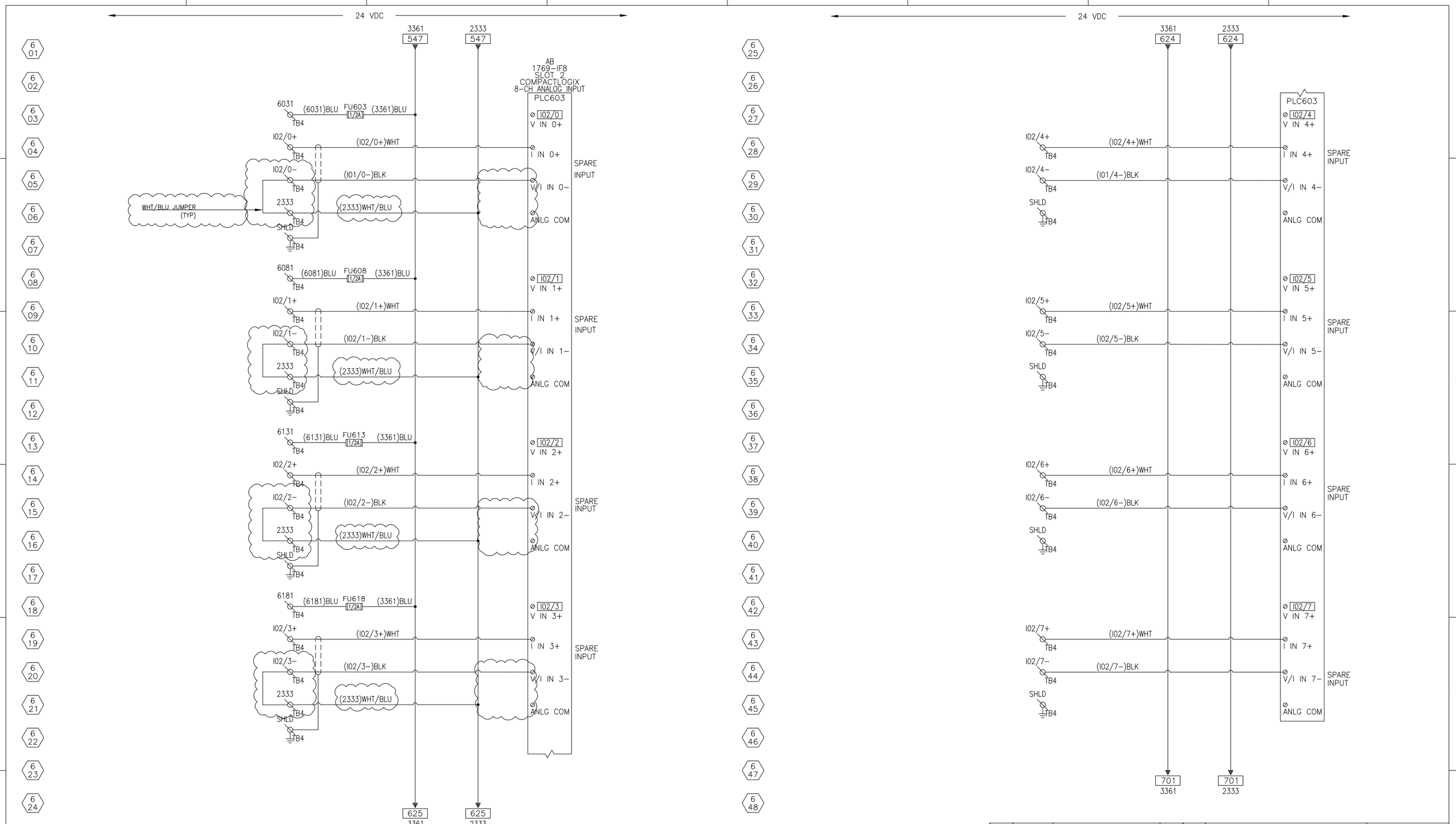

NO.	DATE	REVISIONS	DRAWN BY	CHECKED BY
0	2/12/23	RELEASE FOR CONSTRUCTION	ARM	FJS

FUEL TECH
Technologies to enable clean efficient energy
FUEL TECH, INC. 27601 BELLA VISTA PKWY, WARRENVILLE, IL 60555

UC DAVIS MEDICAL CENTER
SACRAMENTO, CA

PLC PANEL
SCHEMATIC SHEET 6 OF 12

APPROVED BY: SMM
CHECKED BY: FJS
DRAWN BY: JMA
DATE: 8/5/22
SCALE: NONE
SIZE: D
DRAWING NO.
1294P-E02-08

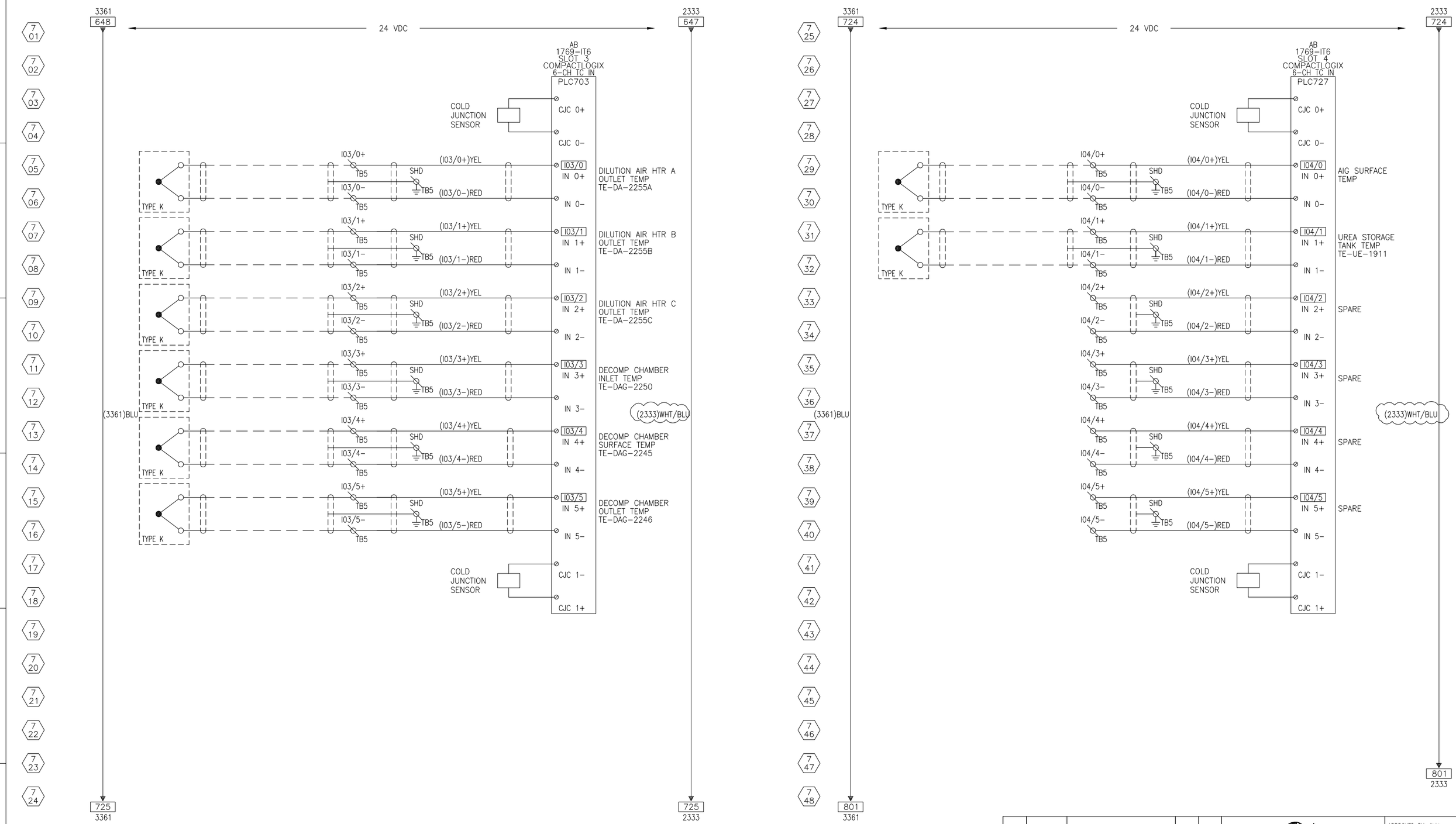

ELECTRICAL CONDUCTOR DESIGNATIONS

————————	INTERNAL TO CONTROL PANEL
— — — — —	EXTERNAL TO CONTROL PANEL

NO.	DATE	REVISIONS	DRAWN BY	CHECKED BY
0	2/12/23	RELEASE FOR CONSTRUCTION	ARM	FJS

FUEL TECH
Technologies to enable clean efficient energy
FUEL TECH, INC. 27601 BELLA VISTA PKWY, WARRENVILLE, IL 60555

UC DAVIS MEDICAL CENTER
SACRAMENTO, CA

PLC PANEL
SCHEMATIC SHEET 7 OF 12

APPROVED BY: SMM
CHECKED BY: FJS
DRAWN BY: JMA
DATE: 8/5/22
SCALE: NONE
SIZE: D
DRAWING NO. 1294P-E02-09

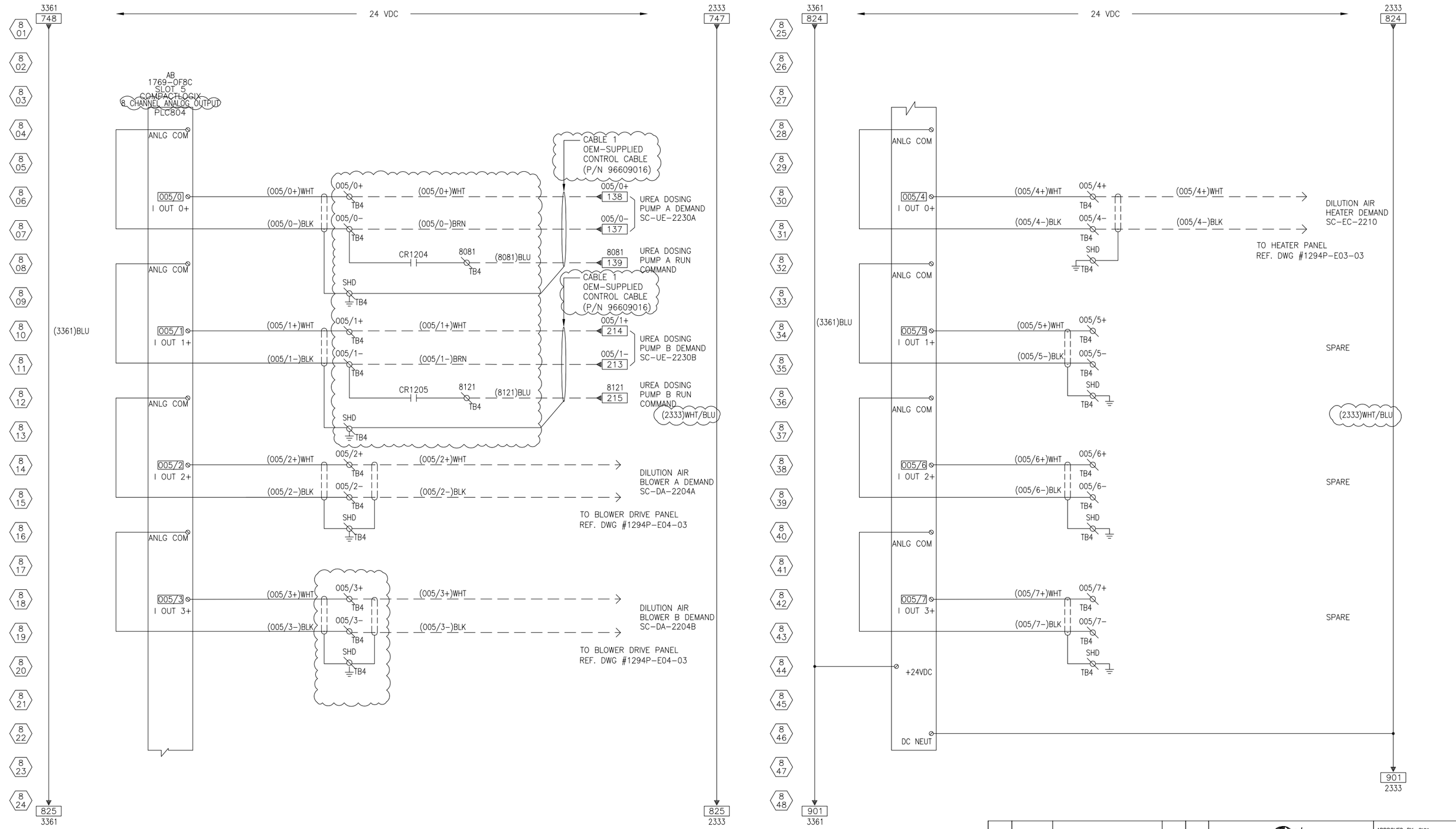

ELECTRICAL CONDUCTOR DESIGNATIONS

————————	INTERNAL TO CONTROL PANEL
— — — — — —	EXTERNAL TO CONTROL PANEL

NO.	DATE	REVISIONS	DRAWN BY	CHECKED BY
0	2/12/23	RELEASE FOR CONSTRUCTION	ARM	FJS

FUEL TECH
Technologies to enable clean efficient energy
FUEL TECH, INC. 27601 BELLA VISTA PKWY, WARRENVILLE, IL 60555

UC DAVIS MEDICAL CENTER
SACRAMENTO, CA

PLC PANEL
SCHEMATIC SHEET 8 OF 12

APPROVED BY: SMM
CHECKED BY: FJS
DRAWN BY: JMA
DATE: 8/5/22
SCALE: NONE
SIZE: D
DRAWING NO.
1294P-E02-10

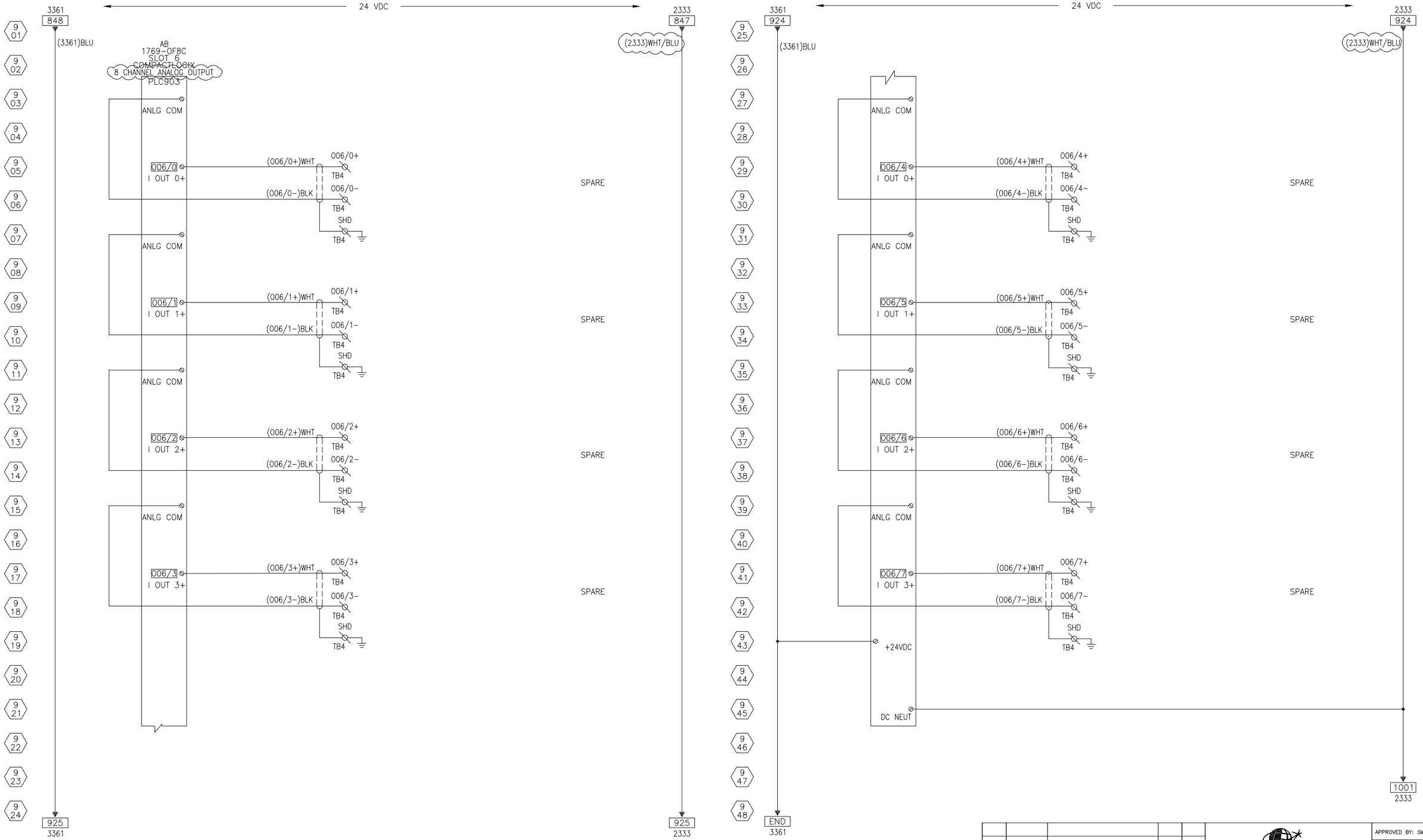

NO.	DATE	REVISIONS	DRAWN BY	CHECKED BY
0	2/12/23	RELEASE FOR CONSTRUCTION	ARM	FJS

FUEL TECH
Technologies to enable clean efficient energy
FUEL TECH, INC. 27601 BELLA VISTA PKWY, WARRENVILLE, IL 60555

UC DAVIS MEDICAL CENTER
SACRAMENTO, CA

PLC PANEL
SCHEMATIC SHEET 9 OF 12

APPROVED BY: SMM
CHECKED BY: FJS
DRAWN BY: JMA
DATE: 8/5/22
SCALE: NONE
SIZE: D
DRAWING NO. 1294P-E02-11

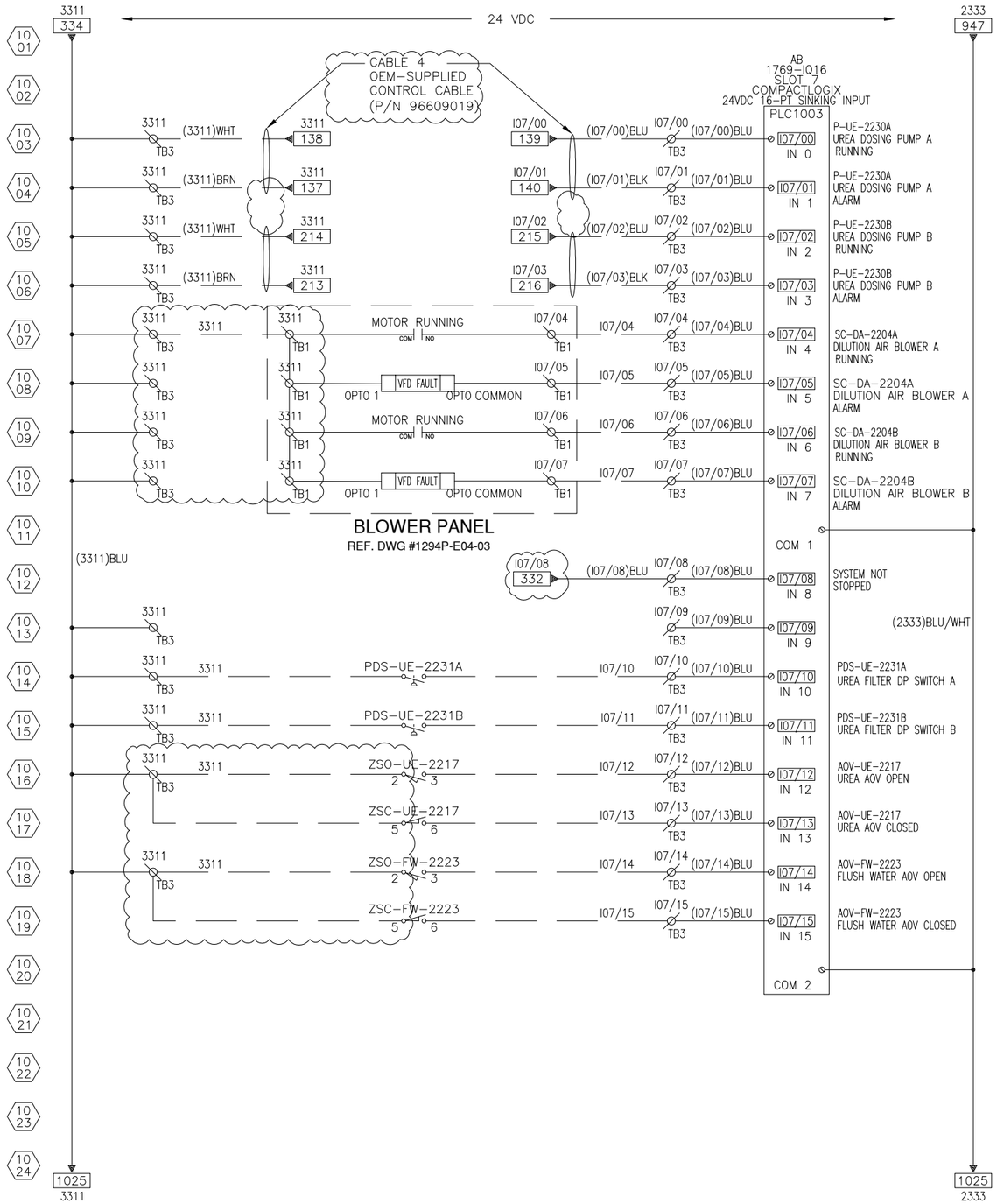

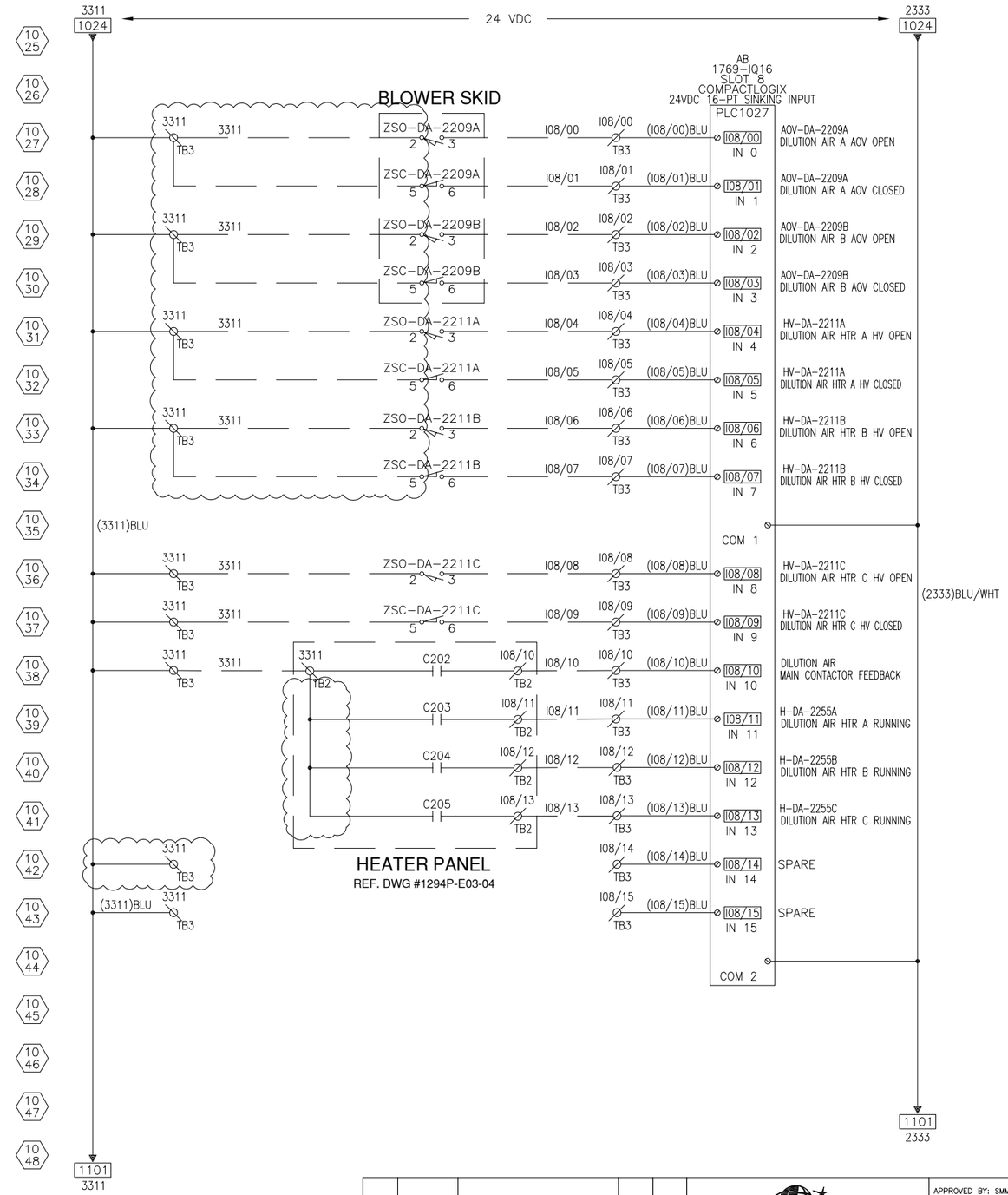

NO.	DATE	REVISIONS	DRAWN BY	CHECKED BY
0	2/12/23	RELEASE FOR CONSTRUCTION	ARM	FJS

FUEL TECH
Technologies to enable clean efficient energy
FUEL TECH, INC. 27601 BELLA VISTA PKWY, WARRENVILLE, IL 60555

UC DAVIS MEDICAL CENTER
SACRAMENTO, CA

PLC PANEL
SCHEMATIC SHEET 10 OF 12

APPROVED BY: SMM
CHECKED BY: FJS
DRAWN BY: JMA
DATE: 8/5/22
SCALE: NONE
SIZE: D
DRAWING NO.
1294P-E02-12

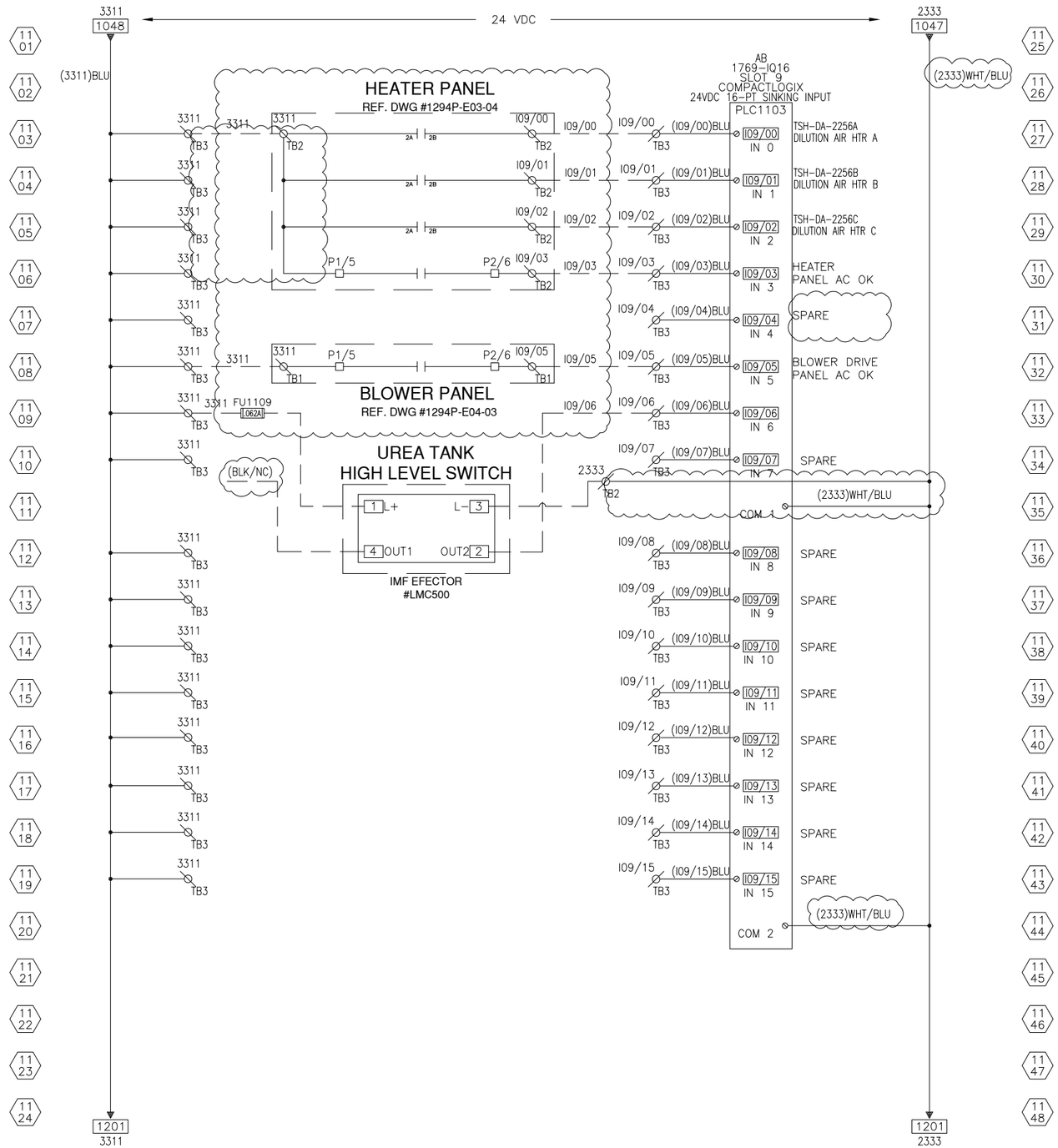

INTENTIONAL BLANK PAGE

NO.	DATE	REVISIONS	DRAWN BY	CHECKED BY
0	2/12/23	RELEASE FOR CONSTRUCTION	ARM	FJS

FUEL TECH
Technologies to enable clean efficient energy
FUEL TECH, INC. 27601 BELLA VISTA PKWY, WARRENVILLE, IL 60555

UC DAVIS MEDICAL CENTER
SACRAMENTO, CA

PLC PANEL
SCHEMATIC SHEET 11 OF 12

APPROVED BY: SMM
CHECKED BY: FJS
DRAWN BY: JMA
DATE: 8/5/22
SCALE: NONE
SIZE: D
DRAWING NO. 1294P-E02-13

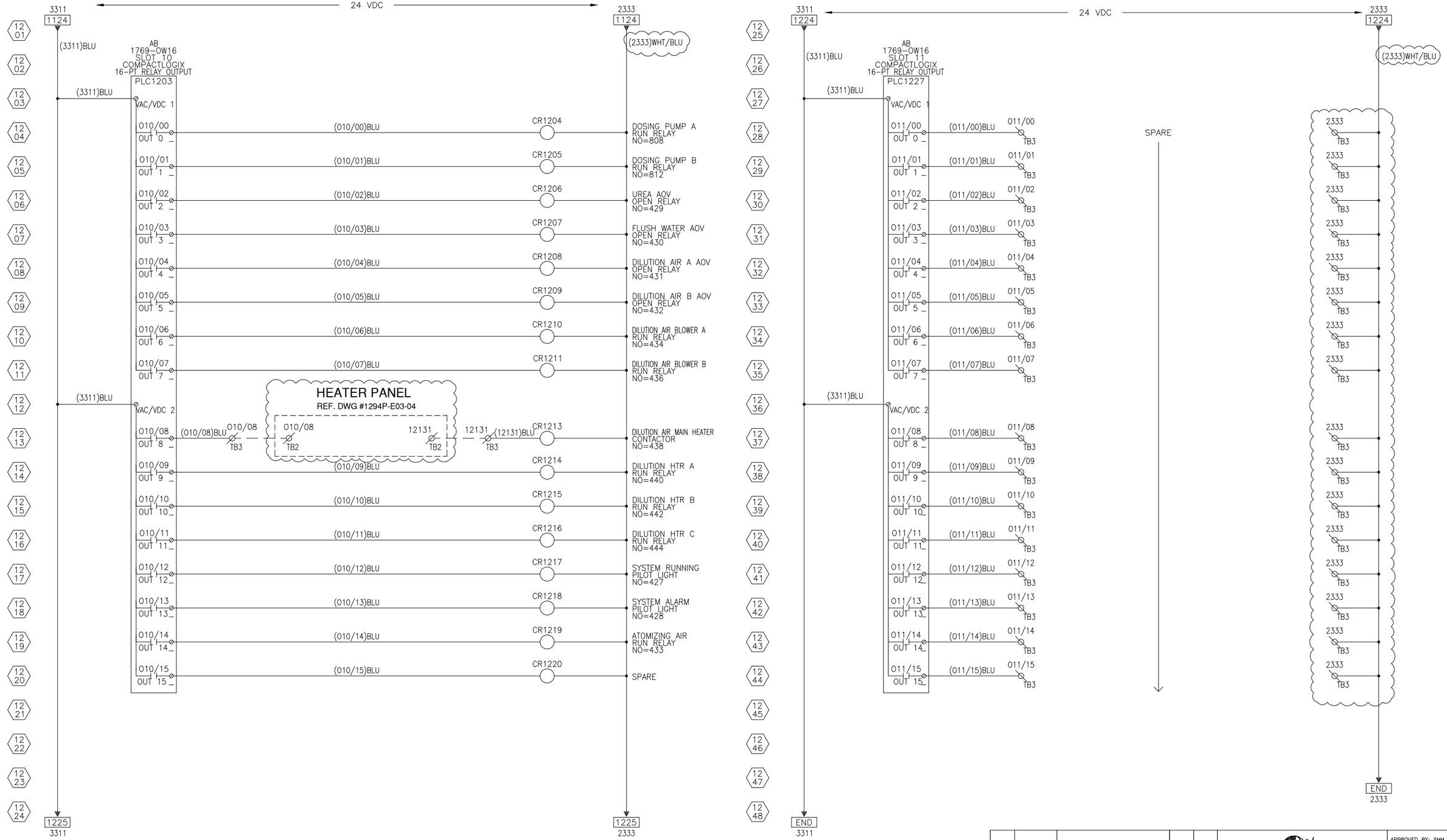

NO.	DATE	REVISIONS	DRAWN BY	CHECKED BY
0	2/12/23	RELEASE FOR CONSTRUCTION	ARM	FJS

FUEL TECH
Technologies to enable clean efficient energy
FUEL TECH, INC. 27601 BELLA VISTA PKWY, WARRENVILLE, IL 60555

UC DAVIS MEDICAL CENTER
SACRAMENTO, CA

PLC PANEL
SCHEMATIC SHEET 12 OF 12

APPROVED BY: SMM
CHECKED BY: FJS
DRAWN BY: JMA
DATE: 8/5/22
SCALE: NONE
SIZE: D
DRAWING NO. 1294P-E02-14

INTENTIONALLY BLANK
(FOR FUTURE USE IF NEEDED)

NO.	DATE	REVISIONS	DRAWN BY	CHECKED BY
0	2/12/23	RELEASE FOR CONSTRUCTION	ARM	FJS

FUEL TECH
Technologies to enable clean efficient energy
FUEL TECH, INC. 27601 BELLA VISTA PKWY, WARRENVILLE, IL 60555

UC DAVIS MEDICAL CENTER
SACRAMENTO, CA

PLC PANEL
FUTURE

APPROVED BY: SMM
CHECKED BY: FJS
DRAWN BY: JMA
DATE: 8/5/22
SCALE: NONE
SIZE: D
DRAWING NO.
1294P-E02-15

INTENTIONALLY BLANK
(FOR FUTURE USE IF NEEDED)

NO.	DATE	REVISIONS	DRAWN BY	CHECKED BY
0	2/12/23	RELEASE FOR CONSTRUCTION	ARM	FJS

FUEL TECH
Technologies to enable clean efficient energy
FUEL TECH, INC. 27601 BELLA VISTA PKWY, WARRENVILLE, IL 60555

UC DAVIS MEDICAL CENTER
SACRAMENTO, CA

PLC PANEL
FUTURE

APPROVED BY: SMM
CHECKED BY: FJS
DRAWN BY: JMA
DATE: 8/5/22
SCALE: NONE
SIZE: D
DRAWING NO.
1294P-E02-16

DEVICE ID	PART NUMBER	DESCRIPTION	MANUFACTURER	QTY
CB103	1489-M1C300	CIRCUIT BREAKER, 30A, 1-POLE480Y/277V AC/48V DC, UL489	AB	1
CB105	1489-M1D020	CIRCUIT BREAKER, 2A, 1-POLE480Y/277V AC/48V DC, UL489	AB	1
CB127,CB203	1489-M1C150	CIRCUIT BREAKER, 15A, 1-POLE480Y/277V AC/48V DC, UL489	AB	2
CB226,CB229,CB233	1489-M1D050	CB, 5A, 1-POLE, D-TRIP CURVE480Y/277V AC/48V DC, UL489	AB	3
CB327(1-8)	2905744	MULTI-CHANNEL CIRCUIT BREAKER,(X8) 24VDC LOADS ONLY	PHOENIX	1
CN406	IAEBHC5E	BULKHEAD COUPLER CAT5ERJ45F TO RJ45F W/CAP PANDUIT	PANDUIT	1
CR1204-CR1220	700-HKM6Z24-3-4	GP SLIM LINE RELAY 24VDC COILSPDT W/IND & MAN OVERRIDE	AB	16
CR1204-CR1221	700-HN221	RELAY SOCKETFOR HKM SPDT RELAY	AB	16
ES404	1085256	ETHERNET SWITCH (8) RJ4510/100 MBPS, 24VDC DIN MTG	PHOENIX	1
FU429-433	MDL-2-R	FUSE, 1/4 X 1-1/4 , 2A, 250VTIME DELAY, NON-INDICATING	BUSSMANN	5
FU502-618	AGC-1/2-R	FUSE, 1/4 X 1-1/4, 1/2A, 250VFAST-ACTING, NON-INDICATING	BUSSMANN	12
FU1109	0312.062	FUSE, CLASS 3AG, .062AMP, 250V AC, FAST ACTING	LITTELFUSE	1
FU'S	1492-H5	TERMINAL FUSE BLOCK, BLACK1/4 X 1-1/4, LED INDICATOR	AB	18
FU'S	1492-MS8X12-ENG	MARKER CARD, TERMINAL BLOCKENGRAVED 56/CARD, RELAY/FUSE	AB	A/R
GND BAR'S	PK12GTA	LOAD CENTER EQUIPMENT GROUNDBAR ASSY	SCHNEIDER ELECTRIC	2
GND LUG'S	L70	GROUND LUG, 14 SOL-4 STRANDED1 CONDUCTOR	T&B	2
HE105	IQ700HE-CF-120-GY-N4	HEAT EXCHANGER 5.7 WATTS/DEG F120/1/60, 0.24 A TYPE 4	ICEQUBE	1
LT325	800H-QRH2W	PILOT LIGHT, WHITE, LED, 30MM12-130V AC/DC, NEMA 4/4X/13	AB	1
LT427	800H-QRH2G	PILOT LIGHT, GREEN, LED, 30MM12-130V AC/DC, NEMA 4/4X/13	AB	1
LT428	800H-QRH2A	PILOT LIGHT, AMBER, LED, 30MM12-130V AC/DC, NEMA 4/4X/13	AB	1
OIT340	2711P-T10C21D8S-FUELTECH	PANELVIEW PLUS 7 STANDARD HMITOUCH SCREEN, 10.4 INCH COLOR	AB	1
PBL331	800H-FRXTQH2RA1	PUSH-PULL/TW-REL, ILL RED LEDMUSHROOM HEAD, 12-130V AC/DC	AB	1
PLC	1769-ECR	PLC, COMPACTLOGIX, RIGHT ENDCAP, 1769	AB	1
PLC703, 727	1769-IT6-FUELTECH	PLC, COMPACTLOGIX/MICROLOGIX1500, TEMPERATURE INPUT MODULE	AB	2
PLC	1769-PB4	PLC, COMPACTLOGIX 1769POWER SUPPLY	AB	1
PLC1003,1027,1103	1769-IQ16	PLC, COMPACTLOGIX 176916 DIGITAL INPUTS	AB	3
PLC1203,PLC1227	1769-OW16	PLC, COMPACTLOGIX 1769/MICROLOGIX 1500, 16 CONTACT OUTPUTS	AB	2
PLC405	MVI69E-MBTCP-FUELTECH	COMMUNICATION MODULE, TCP/IPCOMPACTLOGIX, MODBUS	PROSOFT	1
PLC416	1769-L36ERM	COMPACT LOGIX L3 CONTROLLER3MB, DUAL ETHERNET	AB	1
PLC504,PLC603	1769-IF8-FUELTECH	PLC, COMPACTLOGIX 17698 ANALOG INPUTS	AB	2
PLC804,903	1769-OF8C	PLC, COMPACTLOGIX 1769/MICROLOGIX 1500, 8 ANALOG OUTPUTS	AB	2
PS229	BAE0113	PWR SUP, 24VDC, 1-PHASE240W, ALLIED PN: 72135112	BALLUFF	1
TB1,TB2,TB3,TB4	1492-EBJ3	END BARRIER, TERMINAL BLOCKGRAY, USED ON 1492-J	AB	6
TB1,TB2,TB3,TB4	1492-J4	TERMINAL BLOCK, GRAY, SCREW35A, 600V AC/DC, 22 - 10 AWG	AB	319
TB1,TB2,TB3,TB4	1492-M6X12-ENG	MARKER CARD, TERMINAL BLOCKENGRAVED, 120/CARD, 1492-J	AB	A/R
TB1,TB4	1492-JG4	TERMINAL BLOCK, GRN/YEL, SCREW22 - 10 AWG, GROUND	AB	41
TB's	1492-CJLJ6-10	JUMPER, 10-POLEPUSH-IN CENTER JUMPER	AB	12
TB5	1492-JG3	TERMINAL BLOCK, GRN/YEL, SCREW22 - 12 AWG, FEED-THRU GROUND	AB	15
TB5	1492-JTC3K	TERMINAL BLOCK, GRAY, SCREW30 - 12 AWG, K THERMOCOUPLE	AB	12
TB5	1492-M5X12-ENG	MARKER CARD, TERMINAL BLOCKENGRAVED, 144/CARD	AB	A/R
FU's	1492-N37	END BARRIER, TERMINAL BLOCKBLACK, 1.96 X 2.81 X .11	AB	14
UT504,UT509	4114	UNIVERSAL XMTR, 2-RELAYSRTD/TC/OHM/POT/MA/V DIN MTG	PR ELECTRONICS	2
UT504	4510	DISPLAY/PROGRAMMING FRONT	PR ELECTRONICS	1
	8760	CABLE, 1 PAIR, 18 AWG, PAIREDSHIELDED, 300 VOLTS, PVC GRAY	BELDEN	A/R
	99452	LABEL, ARC FLASH WARNING LABEL	BRADY	1
	1492-EAJ35	END ANCHOR, TERMINAL BLOCKNORMAL DUTY	AB	23
	3112A	THERMOCOUPLE CABLE, TYPE KX, 20AWG, 1 PAIR	ANIXTER	A/R
	98.300.1800.0	DIN RAIL SLOTTED, WIELAND35MM X 7.5MM X 2M	WIELAND	A/R
	C1.5WH6	COVER, PANEL CHANNEL, WHITE1.5 INCH DUCT COVER	PANDUIT	A/R
	C1WH6	COVER, PANEL CHANNEL, WHITE1 INCH DUCT COVER	PANDUIT	A/R
	CMFK	MOUNTING KIT, ENCLOSURESTEEL, ZINC PLATE	HOFFMAN	1
	CP6036	SUB PANEL, 58.20 X 34.20STEEL, WHITE FINISH	HOFFMAN	1
	CSD603616M104	MOD ENCLOSURE PER DWGCSD603616M104	HOFFMAN	1
	G1.5X4WH6	PANEL CHANNEL, 1.5X4 WHITE	PANDUIT	A/R
	G1X4WH6	PANEL CHANNEL, 1X4 WHITE	PANDUIT	A/R
	LAM-2.50-1.00-902	LAMACOID, 2.50 W X 1.00 HWHITE W/BLACK TEXT	ICC	3
	LAM-7.50-1.50-902	LAMACOID 7.5 X 1.50WHITE W/BLACK TEXT	ICC	1
	LP-30MM-902	LEGEND PLATE, 30MM, WHITEW/BLACK TEXT	ICC	4
	MOSE4VAP-BK-003	3 FT CAT 5E CABLE, 600VSHIELDED, BLK, RJ45/RJ45	ANIXTER	1
	MOSE4VAP-BK-010	10 FT CAT 5E CABLE, 600VSHIELDED, BLK, RJ45/RJ45	ANIXTER	2
	THT-19-435-1-PR	LABEL, SPEC/FUSE/TORQUEENGRAVED, SILVER, 3 X 2	ICC	9
	THT-19-439-HFC	LABEL, WARNING - RISK OF FIREOR ELECTRICAL SHOCK	ICC	1
	THT-5-435-10-PR	LABEL, ID, ENGRAVEDSILVER, 1 X 0.5	ICC	A/R

NO.	DATE	REVISIONS	DRAWN BY	CHECKED BY
0	2/12/23	RELEASE FOR CONSTRUCTION	ARM	FJS

FUEL TECH
Technologies to enable clean efficient energy
FUEL TECH, INC. 27601 BELLA VISTA PKWY, WARRENVILLE, IL 60555

UC DAVIS MEDICAL CENTER
SACRAMENTO, CA

PLC PANEL
BILL OF MATERIAL

APPROVED BY: SMM
CHECKED BY: FJS
DRAWN BY: JMA
DATE: 8/5/22
SCALE: NONE
SIZE: D
DRAWING NO. 1294P-E02-17

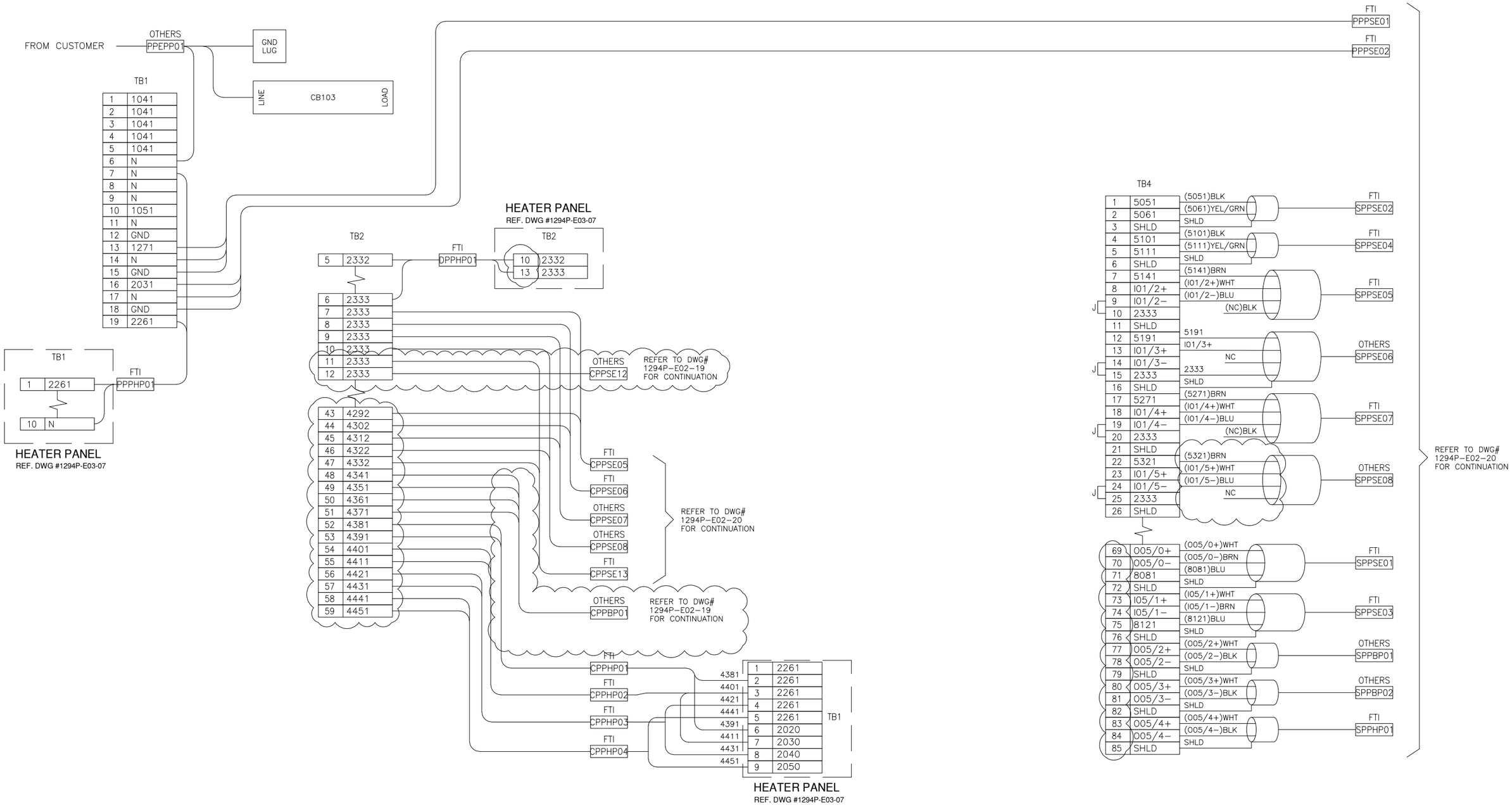

NO.	DATE	REVISIONS	DRAWN BY	CHECKED BY
0	2/12/23	RELEASE FOR CONSTRUCTION	ARM	FJS

FUEL TECH
Technologies to enable clean efficient energy.
FUEL TECH, INC. 27601 BELLA VISTA PKWY, WARRENVILLE, IL 60555

UC DAVIS MEDICAL CENTER
SACRAMENTO, CA

PLC PANEL
INTERCONNECTION W/D SHEET 1 OF 3

APPROVED BY: SMM
CHECKED BY: FJS
DRAWN BY: JMA
DATE: 8/5/22
SCALE: NONE
SIZE: D
DRAWING NO. 1294P-E02-18

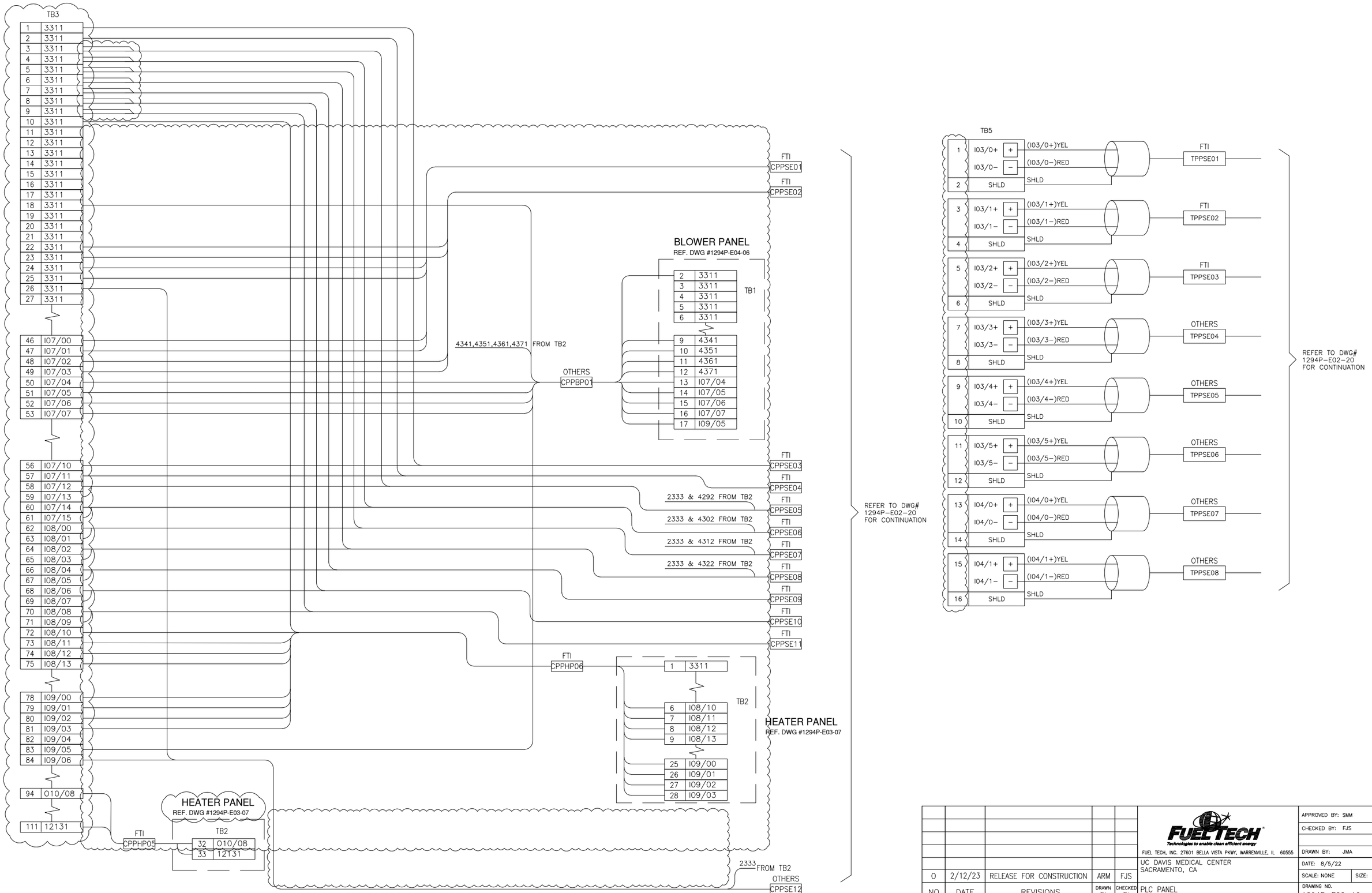

NO.	DATE	REVISIONS	DRAWN BY	CHECKED BY
0	2/12/23	RELEASE FOR CONSTRUCTION	ARM	FJS

FUEL TECH
Technologies to enable clean efficient energy
FUEL TECH, INC. 27601 BELLA VISTA PKWY, WARRENVILLE, IL 60555

UC DAVIS MEDICAL CENTER
SACRAMENTO, CA

PLC PANEL
INTERCONNECTION W/D SHEET 2 OF 3

APPROVED BY: SMM
CHECKED BY: FJS
DRAWN BY: JMA
DATE: 8/5/22
SCALE: NONE
SIZE: D
DRAWING NO. 1294P−E02−19

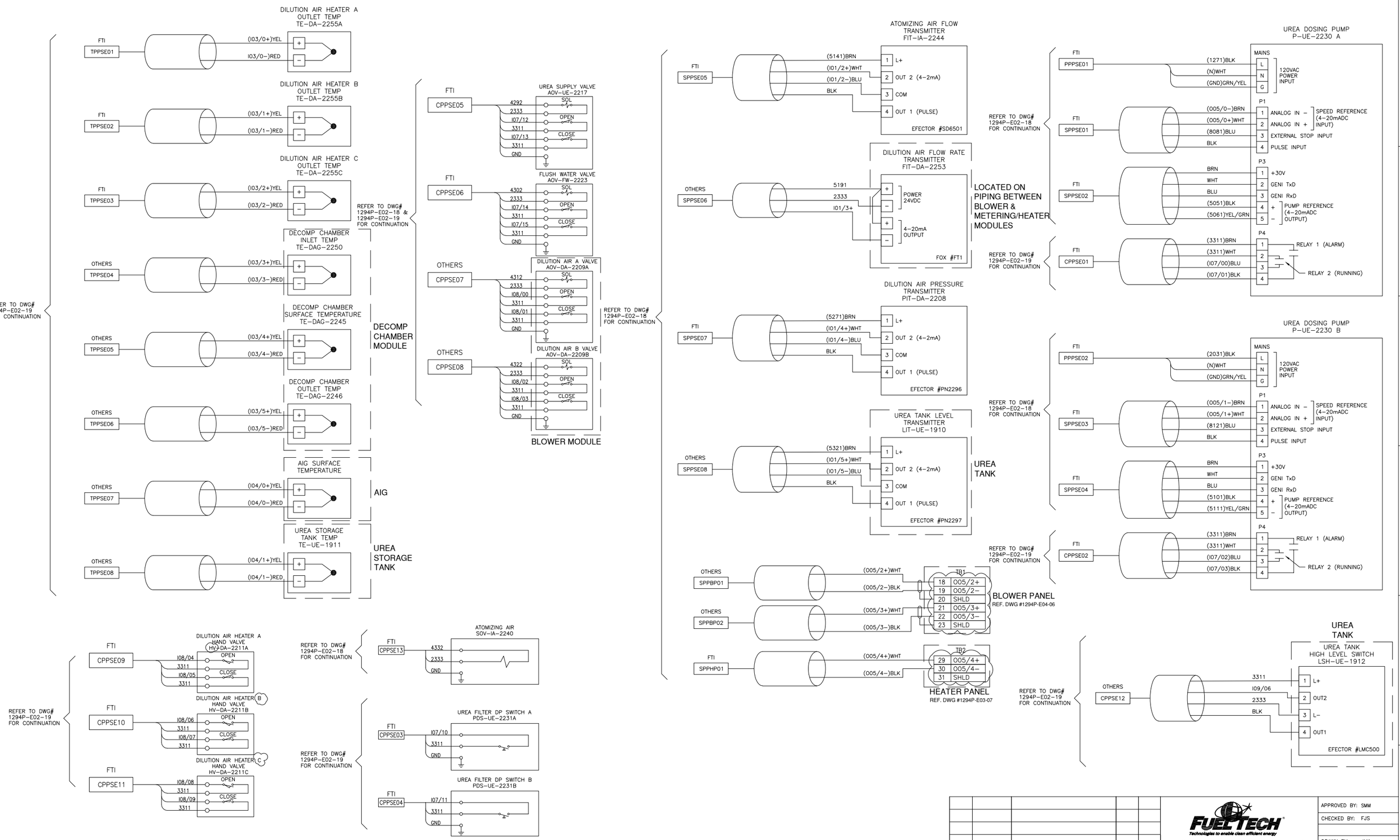

NO.	DATE	REVISIONS	DRAWN BY	CHECKED BY
0	2/12/23	RELEASE FOR CONSTRUCTION	ARM	FJS

FUEL TECH
Technologies to enable clean efficient energy
FUEL TECH, INC. 27601 BELLA VISTA PKWY, WARRENVILLE, IL 60555

UC DAVIS MEDICAL CENTER
SACRAMENTO, CA

PLC PANEL
INTERCONNECTION W/D SHEET 3 OF 3

APPROVED BY: SMM
CHECKED BY: FJS
DRAWN BY: JMA
DATE: 8/5/22
SCALE: NONE
SIZE: D
DRAWING NO. 1294P-E02-20

INTERCONNECT CABLE/WIRE LIST

CABLE NO.	NO. COND.	WIRE SIZE	FROM LOCATION	FROM DEVICE	TO LOCATION	TO DEVICE	WIRE NUMBERS	CABLING BY
PPEPP01	2 + 1	CLIENT-DEFINED	CLIENT	120VAC,1PH,60HZ SOURCE	PLC PANEL	CB103, TB1, GND	L N GND	OTHERS
PPPHP01	2 WIRE CABLE	#14 AWG 600V 90C MIN	PLC PANEL	TB1	HEATER PANEL	TB1	2261 N	FTI
DPPHP01	2 WIRE CABLE	#14 AWG 600V 90C MIN	PLC PANEL	TB2	HEATER PANEL	TB2	2332 2333	FTI
PPPSE01	2 + 1	#14 AWG 600V 90C MIN + #14 AWG GND	PLC PANEL	TB1	P-UE-2230 A	UREA DOSING PUMP A	1271 N GND	FTI
PPPSE02	2 + 1	#14 AWG 600V 90C MIN + #14 AWG GND	PLC PANEL	TB1	P-UE-2230 B	UREA DOSING PUMP B	2031 N GND	FTI
SPPHP01	2 WIRE CABLE	#16 AWG SIGNAL SHIELDED	PLC PANEL	TB4	HEATER PANEL	TB2	005/4+ 005/4- SHLD	FTI
SPPBP01	2 WIRE CABLE	#16 AWG SIGNAL SHIELDED	PLC PANEL	TB4	BLOWER PANEL	TB1	005/2+ 005/2- SHLD	OTHERS
SPPBP02	2 WIRE CABLE	#16 AWG SIGNAL SHIELDED	PLC PANEL	TB4	BLOWER PANEL	TB1	005/3+ 005/3- SHLD	OTHERS
SPPSE01	4 WIRE CABLE	#16 AWG SIGNAL SHIELDED	PLC PANEL	TB4	P-UE-2230 A	UREA DOSING PUMP A	005/0- 005/0+ 8081 SHLD	FTI
SPPSE02	5 WIRE CABLE	#16 AWG SIGNAL SHIELDED	PLC PANEL	TB4	P-UE-2230 A	UREA DOSING PUMP A	5051 5061 SHLD	FTI
SPPSE03	4 WIRE CABLE	#16 AWG SIGNAL SHIELDED	PLC PANEL	TB4	P-UE-2230 B	UREA DOSING PUMP B	005/1- 005/1+ 8121 SHLD	FTI
SPPSE04	5 WIRE CABLE	#16 AWG SIGNAL SHIELDED	PLC PANEL	TB4	P-UE-2230 B	UREA DOSING PUMP B	5101 5111 SHLD	FTI
SPPSE05	4 WIRE CABLE	#16 AWG SIGNAL SHIELDED	PLC PANEL	TB4	FIT-IA-2244	ATOMIZING AIR FLOW TRANSMITTER	5141 I01/2+ I01/2- NC	FTI
SPPSE06	3 WIRE CABLE	#16 AWG SIGNAL SHIELDED	PLC PANEL	TB4	FIT-DA-2253	DILUTION AIR FLOW RATE TRANSMITTER	5191 I01/3+ 2333 SHLD	OTHERS
SPPSE07	4 WIRE CABLE	#16 AWG SIGNAL SHIELDED	PLC PANEL	TB4	PIT-DA-2208	DILUTION AIR PRESSURE TRANSMITTER	5271 I01/4+ I01/4- NC	FTI
SPPSE08	4 WIRE CABLE	#16 AWG SIGNAL SHIELDED	PLC PANEL	TB4	LIT-UE-1910	UREA TANK LEVEL TRANSMITTER	5321 I01/5+ I01/5- NC	OTHERS
CPPSE01	4 WIRE CABLE	#16 AWG 600V 90C MIN	PLC PANEL	TB3	P-UE-2230 A	UREA DOSING PUMP A	I07/00 3311 I07/01 3311	FTI
CPPSE02	4 WIRE CABLE	#16 AWG 600V 90C MIN	PLC PANEL	TB3	P-UE-2230 B	UREA DOSING PUMP B	I07/02 3311 I07/03 3311	FTI
CPPSE03	2 WIRE CABLE	#14 AWG 600V 90C MIN	PLC PANEL	TB3	PDS-UE-2231A	UREA FILTER DP SWITCH A	I07/10 3311	FTI
CPPSE04	2 WIRE CABLE	#14 AWG 600V 90C MIN	PLC PANEL	TB3	PDS-UE-2231B	UREA FILTER DP SWITCH B	I07/11 3311	FTI
CPPSE05	7 WIRE CABLE	#14 AWG 600V 90C MIN	PLC PANEL	TB2 & TB3, GND	AOV-UE-2217	UREA SUPPLY VALVE	4292 2333 I07/12 3311 I07/13 GND	FTI
CPPSE06	7 WIRE CABLE	#14 AWG 600V 90C MIN	PLC PANEL	TB2 & TB3, GND	AOV-FW-2223	FLUSH WATER VALVE	4302 2333 I07/14 3311 I07/15 GND	FTI
CPPSE07	7 WIRE CABLE	#14 AWG 600V 90C MIN	PLC PANEL	TB2 & TB3, GND	AOV-DA-2209A	DILUTION AIR A VALVE	4312 2333 I08/00 3311 I08/01 GND	OTHERS
CPPSE08	7 WIRE CABLE	#14 AWG 600V 90C MIN	PLC PANEL	TB2 & TB3, GND	AOV-DA-2209B	DILUTION AIR B VALVE	4322 2333 I08/02 3311 I08/03 GND	OTHERS
CPPSE09	4 WIRE CABLE	#14 AWG 600V 90C MIN	PLC PANEL	TB3	HV-DA-2211A	DILUTION AIR HEATER A HAND VALVE	I08/04 3311 I08/05	FTI
CPPSE10	4 WIRE CABLE	#14 AWG 600V 90C MIN	PLC PANEL	TB3	HV-DA-2211B	DILUTION AIR HEATER B HAND VALVE	I08/06 3311 I08/07	FTI
CPPSE11	4 WIRE CABLE	#14 AWG 600V 90C MIN	PLC PANEL	TB3	HV-DA-2211C	DILUTION AIR HEATER C HAND VALVE	I08/08 3311 I08/09	FTI
CPPSE12	4 WIRE CABLE	#14 AWG 600V 90C MIN	PLC PANEL	TB2 & TB3	LSH-UE-1912	UREA TANK HIGH LEVEL SWITCH	3311 I09/06 2333 NC	OTHERS
CPPSE13	3 WIRE CABLE	#14 AWG 600V 90C MIN	PLC PANEL	TB2	SOV-IA-2240	ATOMIZING AIR VALVE	4332 2333 GND	FTI
CPPHP01	2 WIRE CABLE	#14 AWG 600V 90C MIN	PLC PANEL	TB2	HEATER PANEL	TB1	4381 4391	FTI
CPPHP02	2 WIRE CABLE	#14 AWG 600V 90C MIN	PLC PANEL	TB2	HEATER PANEL	TB1	4401 4411	FTI
CPPHP03	2 WIRE CABLE	#14 AWG 600V 90C MIN	PLC PANEL	TB2	HEATER PANEL	TB1	4421 4431	FTI
CPPHP04	2 WIRE CABLE	#14 AWG 600V 90C MIN	PLC PANEL	TB2	HEATER PANEL	TB1	4441 4451	FTI
CPPHP05	2 WIRE CABLE	#14 AWG 600V 90C MIN	PLC PANEL	TB3	HEATER PANEL	TB2	010/08 12131	FTI
CPPHP06	9 WIRE CABLE	#14 AWG 600V 90C MIN	PLC PANEL	TB3	HEATER PANEL	TB2	I08/10 3311 I08/11 I08/12 I08/13 I09/00 I09/01 I09/02 I09/03	FTI
CPPBP01	10 WIRE CABLE	#14 AWG 600V 90C MIN	PLC PANEL	TB2 & TB3	BLOWER PANEL	TB1	I07/04 3311 I07/05 I07/06 I07/07 I09/05 4341 4351 4361 4371	OTHERS
TPPSE01	1 PR 20AWG SHLD CABLE	TYPE KX THERMOCOUPLE WIRE 20 AWG MIN	PLC PANEL	TB5	TE-DA-2255A	DILUTION AIR HEATER A OUTLET TEMP	I03/0+ I03/0- SHLD	FTI
TPPSE02	1 PR 20AWG SHLD CABLE	TYPE KX THERMOCOUPLE WIRE 20 AWG MIN	PLC PANEL	TB5	TE-DA-2255B	DILUTION AIR HEATER B OUTLET TEMP	I03/1+ I03/1- SHLD	FTI
TPPSE03	1 PR 20AWG SHLD CABLE	TYPE KX THERMOCOUPLE WIRE 20 AWG MIN	PLC PANEL	TB5	TE-DA-2255C	DILUTION AIR HEATER B OUTLET TEMP	I03/2+ I03/2- SHLD	FTI
TPPSE04	1 PR 20AWG SHLD CABLE	TYPE KX THERMOCOUPLE WIRE 20 AWG MIN	PLC PANEL	TB5	TE-DAG-2250	DECOMP CHAMBER INLET TEMP	I03/3+ I03/3- SHLD	OTHERS
TPPSE05	1 PR 20AWG SHLD CABLE	TYPE KX THERMOCOUPLE WIRE 20 AWG MIN	PLC PANEL	TB5	TE-DAG-2245	DECOMP CHAMBER SURFACE TEMP	I03/4+ I03/4- SHLD	OTHERS
TPPSE06	1 PR 20AWG SHLD CABLE	TYPE KX THERMOCOUPLE WIRE 20 AWG MIN	PLC PANEL	TB5	TE-DAG-2246	DECOMP CHAMBER OUTLET TEMP	I03/5+ I03/5- SHLD	OTHERS
TPPSE07	1 PR 20AWG SHLD CABLE	TYPE KX THERMOCOUPLE WIRE 20 AWG MIN	PLC PANEL	TB5		AIG SURFACE TEMP	I04/0+ I04/0- SHLD	OTHERS
TPPSE08	1 PR 20AWG SHLD CABLE	TYPE KX THERMOCOUPLE WIRE 20 AWG MIN	PLC PANEL	TB5	TE-UE-1911	UREA STORAGE TANK TEMP	I04/1+ I04/1- SHLD	OTHERS

NO.	DATE	REVISIONS	DRAWN BY	CHECKED BY
0	2/12/23	RELEASE FOR CONSTRUCTION	ARM	FJS

FUEL TECH
Technologies to enable clean efficient energy
FUEL TECH, INC. 27601 BELLA VISTA PKWY, WARRENVILLE, IL 60555

UC DAVIS MEDICAL CENTER
SACRAMENTO, CA

PLC PANEL
CABLE LISTING

APPROVED BY: SMM
CHECKED BY: FJS
DRAWN BY: JMA
DATE: 8/5/22
SCALE: NONE
SIZE: D
DRAWING NO. 1294P-E02-21

LEFT SIDE VIEW

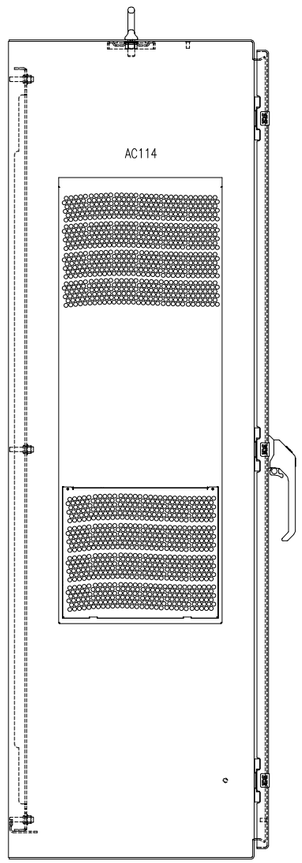

FRONT VIEW

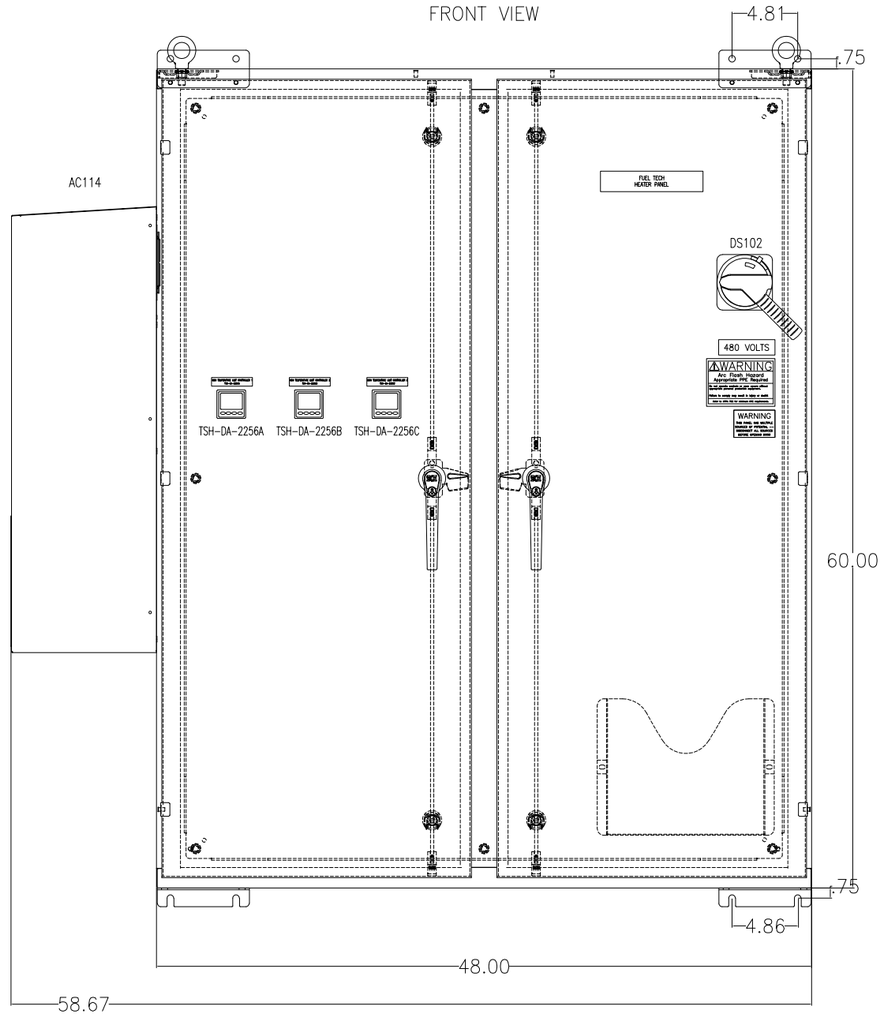

RIGHT SIDE VIEW

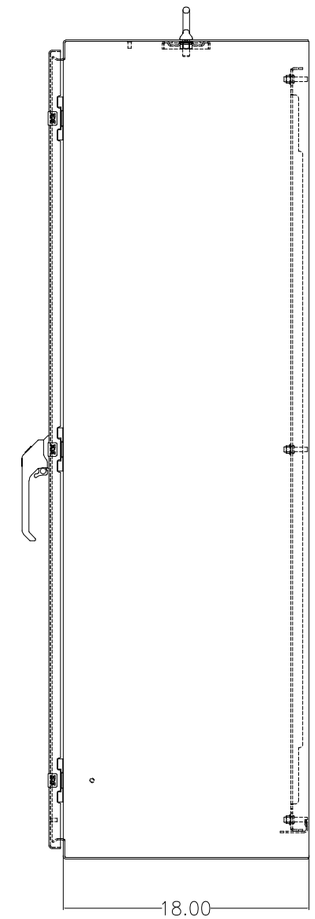

THT-19-413-1-PR

The Industrial Controls Corporation
ENSURE TRANSPORT, HANDLING AND USE
N56 W24842 Corporate Circle Sussex, WI 53089
480 VOLTS 145.9 FLA (TOTAL)
60 CYCLES N/A FLA (LARGEST MOTOR)
3 PHASE 1294-E03 DRWG. NO.
SHORT CIRCUIT CURRENT 100 kA RMS
SYMMETRICAL, 480 V MAXIMUM
TYPE 4 ENCLOSURE

Fuse ID	Mfg.	Fuse# or Equivalent	Volts
FU102	LITEFUSE	JTD20000	600
FU105	LITEFUSE	JTD1500	600
FU114-115	LITEFUSE	KLDR4	600
FU236-1428	LITEFUSE	JLS45	600

USE COPPER CONDUCTORS ONLY

PART #	PART NUMBER	TORQUE (IN/LB)	TEMP (C)
DS102	1949-TL1	275	90
TB's	1492-J6	14.2	90
TB's	1492-J4	9.0	90
TB's	1492-J04	9.0	90
TB's	1492-JC3K	3.5-5.3	90
GND BAR	PH120TA	20 (14-10GA)	90
GND BAR	PH120TA	25 (8GA)	90
GND BAR	PH120TA	35 (6-4GA)	90

USE COPPER CONDUCTORS ONLY

PART #	PART NUMBER	TORQUE (IN/LB)	TEMP (C)
GND LUG	L70	35 (14-10GA)	90
GND LUG	L70	40 (8GA)	90
GND LUG	L70	45 (6-4GA)	90

THT-19-435-1-HFC

WARNING

RISK OF FIRE OR ELECTRICAL SHOCK

THE OPENING OF THE BRANCH-CIRCUIT PROTECTIVE DEVICE MAY BE AN INDICATION THAT A FAULT CURRENT HAS BEEN INTERRUPTED. ALL CURRENT-CARRYING PARTS AND OTHER COMPONENTS PROTECTED BY THIS DEVICE SHOULD BE EXAMINED AND REPLACED IF DAMAGED. IF BURNOUT OF A CURRENT ELEMENT OF AN OVERLOAD RELAY OCCURS, THE COMPLETE OVERLOAD RELAY MUST BE REPLACED.

99454

WARNING

Arc Flash Hazard
Appropriate PPE Required

Do not operate controls or open covers without appropriate personal protection equipment.

Failure to comply may result in injury or death!

Refer to NFPA 70E for minimum PPE requirements.

THT-19-439-M

WARNING

THIS PANEL HAS MULTIPLE SOURCES OF POTENTIAL -- DISCONNECT ALL SOURCES BEFORE OPENING DOOR

152371

480 VOLTS

NAMEPLATE SCHEDULE

LAM-7.50-1.50-902

FUEL TECH HEATER PANEL

LAM-2.50-1.50-902

HIGH TEMPERATURE LIMIT CONTROLLER 1
TSH-DA-2256A

HIGH TEMPERATURE LIMIT CONTROLLER 2
TSH-DA-2256B

HIGH TEMPERATURE LIMIT CONTROLLER 3
TSH-DA-2256C

NO.	DATE	REVISIONS	DRAWN BY	CHECKED BY
0	2/12/23	RELEASE FOR CONSTRUCITON	ARM	FJS

FUEL TECH
Technologies to enable clean efficient energy
FUEL TECH, INC. 27601 BELLA VISTA PKWY, WARRENVILLE, IL 60555

UC DAVIS MEDICAL CENTER
SACRAMENTO, CA

HEATER PANEL
CABINET LAYOUT

APPROVED BY: SMM
CHECKED BY: FJS
DRAWN BY: JMA
DATE: 8/5/22
SCALE: NONE
SIZE: D
DRAWING NO. 1294P-E03-01

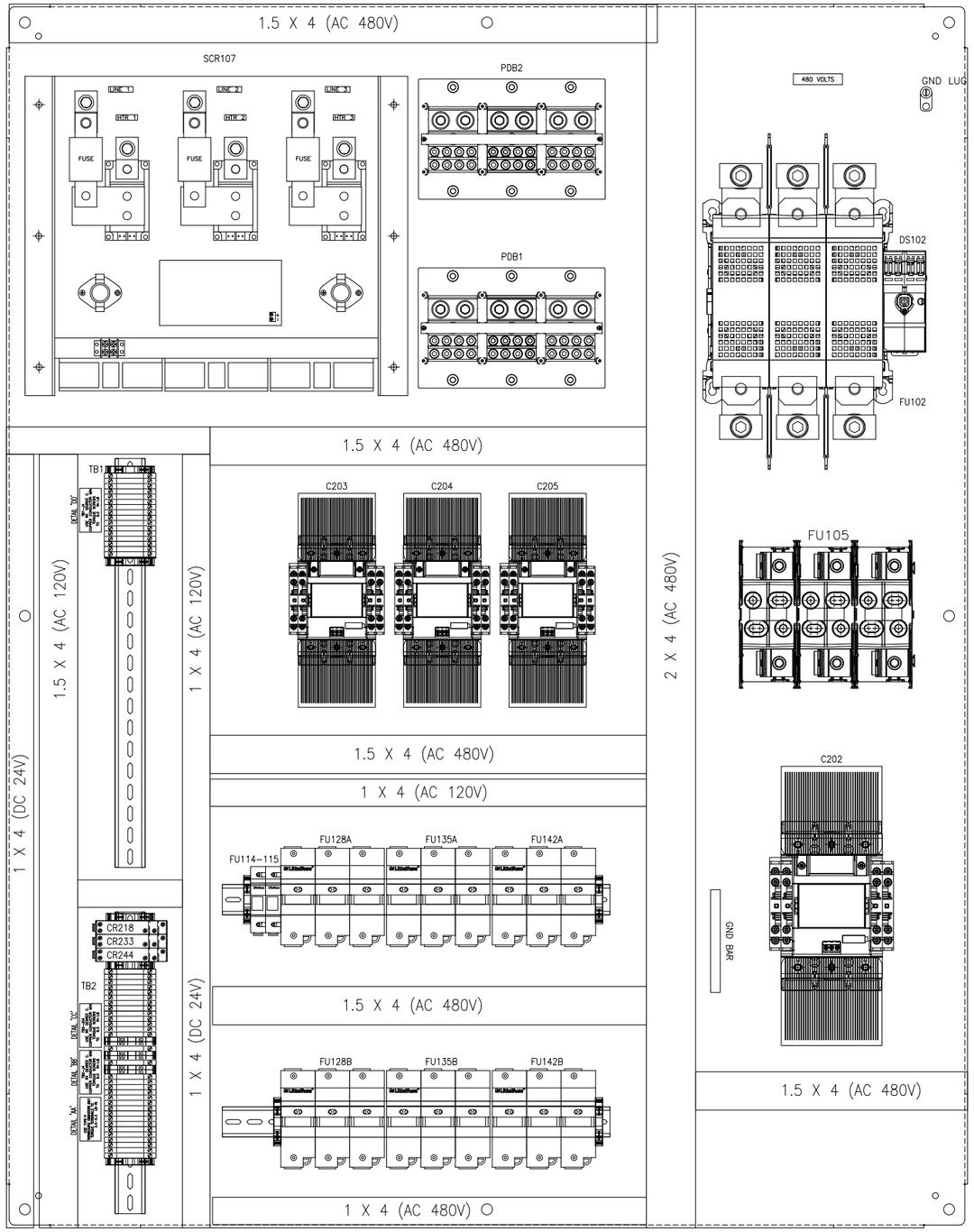

	120VAC TB1
1	2261
2	2261
3	2261
4	2261
5	2261
6	2020
7	2030
8	2040
9	2050
10	N
11	N
12	N
13	N
14	N
15	SPARE
16	SPARE
17	SPARE

17 @ 1492-J4

	24VDC TB2	
1	3311	
2	3311	
3	3311	
4	3311	
5	3311	
6	I08/10	
7	I08/11	
8	I08/12	
9	I08/13	
10	2332	
11	2332	
12	2332	
13	2333	
14	2333	
15	2333	
16	2160	*
	2170	*
17	SHLD	**
18	2290	*
	2300	*
19	SHLD	**
20	2400	*
	2410	*
21	SHLD	**
22	3311	
23	3311	
24	3311	
25	I09/00	
26	I09/01	
27	I09/02	
28	I09/03	
29	O05/4+	
30	O05/4-	
31	SHLD	**
32	O10/08	
33	12131	
34	SPARE	
35	SPARE	
36	SPARE	
37	SPARE	

30 @ 1492-J4
*3 @ 1492-JTC3K
**4 @ 1492-JG4

44315

480 VOLTS

THT-17-413-3-PR

DETAIL 'AA'

USE TYPE K THERMOCOUPLE CONDUCTORS ONLY TORQUE TERMINALS TO 3.5-5.3 LB-IN

DETAIL 'BB'

TB2-J4 USE 90 DEGREE C. COPPER CONDUCTOR MIN TORQUE SCREWS TO 9.0 IN-LB

DETAIL 'CC'

TB2-JG4 USE 90 DEGREE C. COPPER CONDUCTOR MIN TORQUE SCREWS TO 9.0 IN-LB

DETAIL 'DD'

TB1-J4 USE 90 DEGREE C. COPPER CONDUCTOR MIN TORQUE SCREWS TO 9.0 IN-LB

NO.	DATE	REVISIONS	DRAWN BY	CHECKED BY
0	2/12/23	RELEASE FOR CONSTRUCTION	ARM	FJS

FUEL TECH
Technologies to enable clean efficient energy
FUEL TECH, INC. 27601 BELLA VISTA PKWY, WARRENVILLE, IL 60555

UC DAVIS MEDICAL CENTER
SACRAMENTO, CA

HEATER PANEL
PANEL LAYOUT

APPROVED BY: SMM
CHECKED BY: FJS
DRAWN BY: JMA
DATE: 8/5/22
SCALE: NONE
SIZE: D
DRAWING NO. 1294P-E03-02

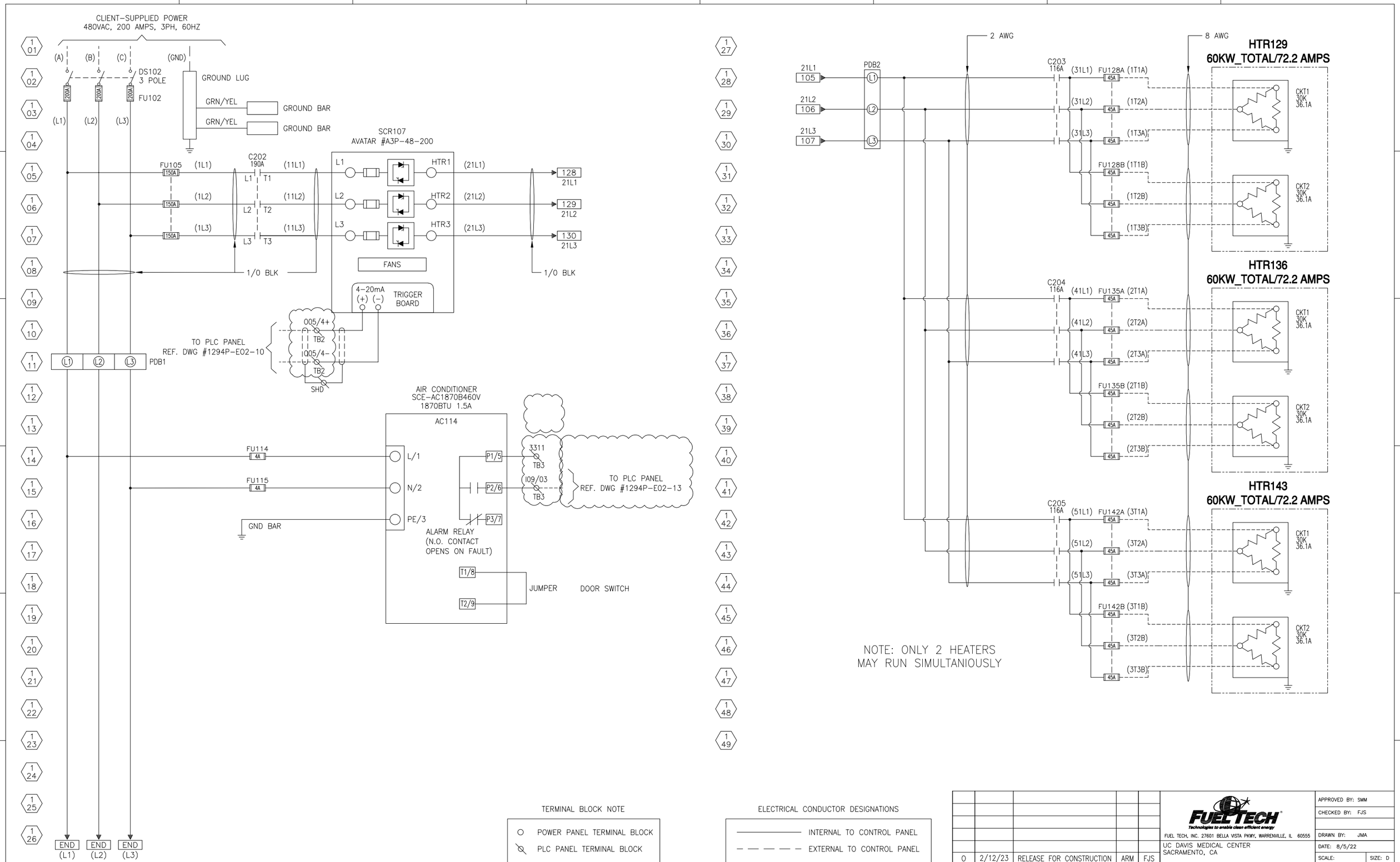

TERMINAL BLOCK NOTE

- ○ POWER PANEL TERMINAL BLOCK
- ⊘ PLC PANEL TERMINAL BLOCK

ELECTRICAL CONDUCTOR DESIGNATIONS

- ——— INTERNAL TO CONTROL PANEL
- — — — — EXTERNAL TO CONTROL PANEL

NO.	DATE	REVISIONS	DRAWN BY	CHECKED BY
0	2/12/23	RELEASE FOR CONSTRUCTION	ARM	FJS

FUEL TECH
Technologies to enable clean efficient energy
FUEL TECH, INC. 27601 BELLA VISTA PKWY, WARRENVILLE, IL 60555

UC DAVIS MEDICAL CENTER
SACRAMENTO, CA

HEATER PANEL
SCHEMATIC SHEET 1 OF 2

APPROVED BY: SMM
CHECKED BY: FJS
DRAWN BY: JMA
DATE: 8/5/22
SCALE:
SIZE: D
DRAWING NO.
1294P-E03-03

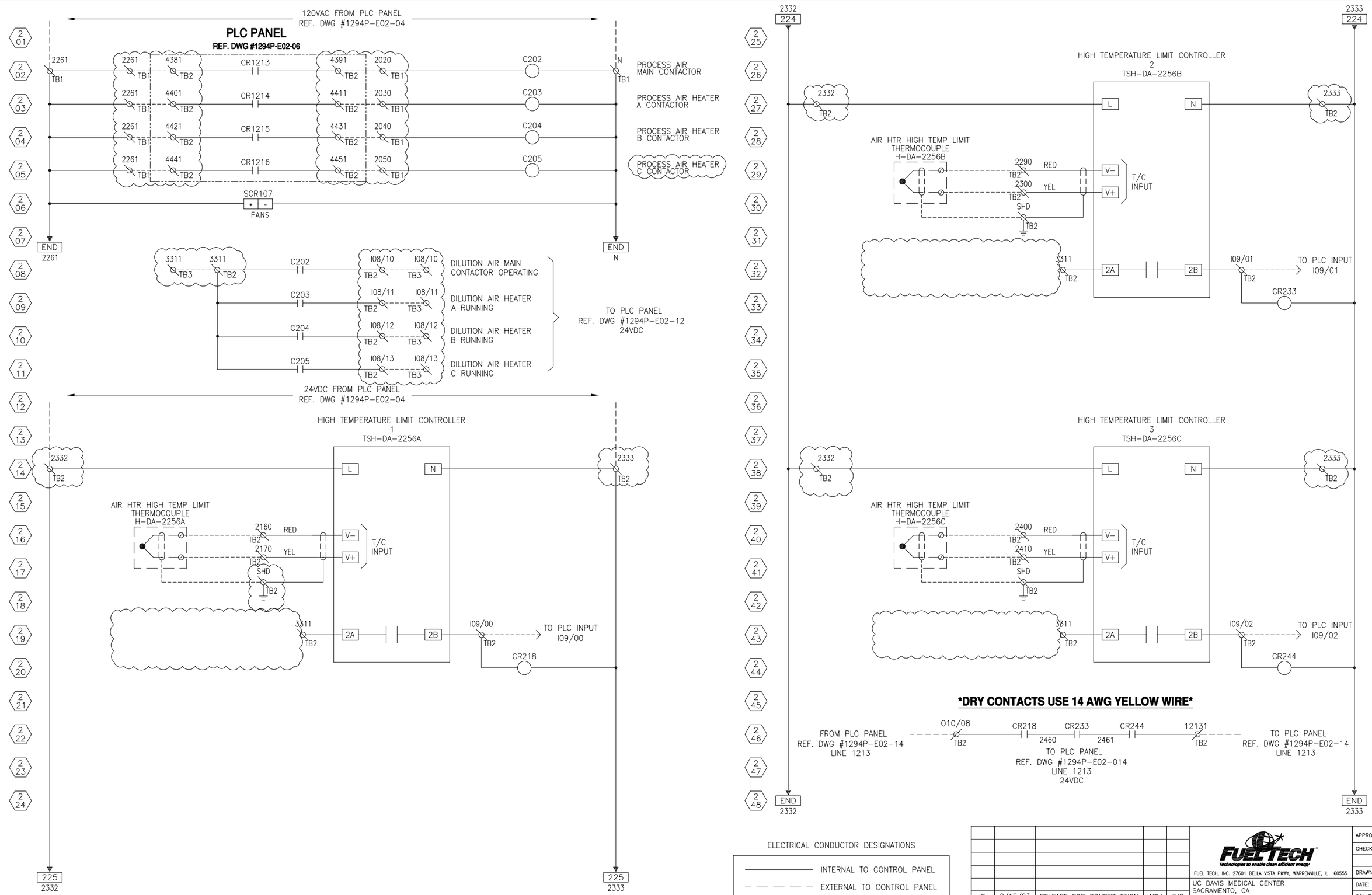

ELECTRICAL CONDUCTOR DESIGNATIONS

————————	INTERNAL TO CONTROL PANEL
— — — — —	EXTERNAL TO CONTROL PANEL

NO.	DATE	REVISIONS	DRAWN BY	CHECKED BY
0	2/12/23	RELEASE FOR CONSTRUCTION	ARM	FJS

FUEL TECH
Technologies to enable clean efficient energy
FUEL TECH, INC. 27601 BELLA VISTA PKWY, WARRENVILLE, IL 60555

UC DAVIS MEDICAL CENTER
SACRAMENTO, CA

HEATER PANEL
SCHEMATIC SHEET 2 OF 2

APPROVED BY: SMM
CHECKED BY: FJS
DRAWN BY: JMA
DATE: 8/5/22
SCALE: NONE
SIZE: D
DRAWING NO.
1294P-E03-04

INTENTIONALLY BLANK
(FOR FUTURE USE IF NEEDED)

NO.	DATE	REVISIONS	DRAWN BY	CHECKED BY
0	2/12/23	RELEASE FOR CONSTRUCTION	ARM	FJS

FUEL TECH
Technologies to enable clean efficient energy
FUEL TECH, INC. 27601 BELLA VISTA PKWY, WARRENVILLE, IL 60555

UC DAVIS MEDICAL CENTER
SACRAMENTO, CA

HEATER PANEL
FUTURE

APPROVED BY: SMM
CHECKED BY: FJS
DRAWN BY: JMA
DATE: 8/5/22
SCALE: NONE
SIZE: D
DRAWING NO. 1294P-E03-05

DEVICE ID	PART NUMBER	DESCRIPTION	MANUFACTURER	QTY
AC114	SCE-AC1870B460V	AC, 1870 BTUH, TYPE 3R/4/12460/1/60 1.5A RUN, 5.0A START	SAGINAW	1
C202	100-E190KD11	CONTACTOR, 190A, 100-250V AC50/60HZ, 100-250V DC, 1NO 1NC	AB	1
C203-205	100-E116KD11	CONTACTOR, 116A 100-250V 50/60HZ 3-P 1NO-1NC AUX W/LUGS	AB	3
C203-205	100-ETS146L	TERMINAL SHROUD FOR100-E116 THRU 100-E146	AB	6
CR218-244	700-HKM6Z24-3-4	GP SLIM LINE RELAY 24VDC COILSPDT W/IND & MAN OVERRIDE	AB	3
CR218-244	700-HN221	RELAY SOCKETFOR HKM SPDT RELAY	AB	3
DS102	194R-HM4E	OPERATING HANDLE, ROTARYRED/YEL TYPE 1/3R/12/4/4X	AB	1
DS102	194R-J200-1753	DISCONNECT, FUSED, J TYPE200A	AB	1
DS102	194R-LNC31	TERMINAL SHROUDS, USED ON200A UL FUSED SWITCHES	AB	2
DS102	194R-R8	DISCONNECT OPERATING SHAFT22.8" 100A-400A DISC SWITCHES	AB	1
DS102	194R-TL1	TERMINAL LUGS, 300MCM, KITUL200A FUSED SWITCHES, 3-PACK	AB	2
FU102	JTD200ID	FUSE, CLASS J, 200A TIME-DELAY600V AC/500V DC, INDICATING	LITTELFUSE	3
FU105	CVRI-J-60200-M	FUSE COVER, 1-POLE, WITH BFIUSED ON JM60200-XMW16	BUSSMANN	3
FU105	JM60200-3CR	FUSE BLOCK, 3-POLE, 200 AMPSCLASS J	EATON	1
FU105	JTD150ID	FUSE, CLASS J, 150A TIME-DELAY600V AC/300V DC, INDICATING	LITTELFUSE	3
FU114-115	KLDR4	FUSE, CLASS CC, 4 AMPS, 600V,TIME-DELAY, NON-INDICATING	LITTELFUSE	2
FU114-115	LPSC002ID	FUSE HOLDER, 2-POLE, 30ACLASS CC, 600V AC/DC WBFI	LITTELFUSE	1
FU128A-142B	JLS45	FUSE, CLASS J, 45A, 600V AC, FAST-ACTING, NON-INDICATING	LITTELFUSE	18
FU128A-142B	LFPSJ60-3ID	FUSE HOLDER, 3 POLE, CLASS J60A, FINGER SAFE; 200 KA	LITTELFUSE	6
GND BAR	PK12GTA	LOAD CENTER EQUIPMENT GROUNDBAR ASSY	SCHNEIDER ELECTRIC	2
GND LUG	L70	GROUND LUG, 14 SOL-4 STRANDED1 CONDUCTOR	T&B	1
PDB1,PDB2	1492-PD3287	PDB, 3-POLE 760ALN:(2)500-#6 LD:(8) #2-#14	AB	2
SCR107	A3P-48-200	SCR POWER CONTROLLER, 480V200A, 3-PHASE, 4-20 MA INPUT	AVATAR INSTRUMENTS	1
TB1,TB2	1492-CJJ8-10	JUMPER, TERMINAL BLOCK 10-POLEINSULATED, 8MM SCREW CENTER	AB	4
TB1,TB2	1492-J4	TERMINAL BLOCK, GRAY, SCREW35A, 600V AC/DC, 22 - 10 AWG	AB	47
TB1,TB2	1492-EBJ3	END BARRIER, TERMINAL BLOCKGRAY, USED ON 1492-J	AB	2
TB1,TB2	1492-M6X12-ENG	MARKER CARD, TERMINAL BLOCKENGRAVED, 120/CARD, 1492-J	AB	A/R
TB2	1492-JG4	TERMINAL BLOCK, GRN/YEL, SCREW22 - 10 AWG, GROUND	AB	4
TB2	1492-JTC3K	TERMINAL BLOCK, GRAY, SCREW30 - 12 AWG, K THERMOCOUPLE	AB	3
TB2	1492-M8X5-ENG	MARKER CARD, TERMINAL BLOCKENGRAVED, 160/CARD, 1492-J/-L	AB	A/R
TSH-DA-2256A THRU C	3216I/FM/VL/LR + MORE	HIGH LIMIT TEMP CONTROLLER1/16 DIN, FM APPROVED	EUROTHERM	3
	1492-EAJ35	END ANCHOR, TERMINAL BLOCKNORMAL DUTY	AB	9
	152371	LABEL, 480V, VOLTAGE LABEL1.125 X 4.125 , BLACK ON ORG	ICC	1
	44315	LABEL, 480V, VOLTAGE LABEL0.5 X 2.25 , BLACK ON ORANGE	ICC	1
	8760	CABLE, 1 PAIR, 18 AWG, PAIREDSHIELDED, 300 VOLTS, PVC GRAY	BELDEN	A/R
	98.300.1800.0	DIN RAIL SLOTTED, WIELAND35MM X 7.5MM X 2M	WIELAND	A/R
	99454	LABEL, WARNING LABELARC FLASH, 3.5 H X 5 W	BRADY	1
	C1.5WH6	COVER, PANEL CHANNEL, WHITE1.5 INCH DUCT COVER	PANDUIT	A/R
	C1WH6	COVER, PANEL CHANNEL, WHITE1 INCH DUCT COVER	PANDUIT	A/R
	G1.5X4WH6	PANEL CHANNEL, 1.5X4 WHITE	PANDUIT	A/R
	G1X4WH6	PANEL CHANNEL, 1X4 WHITE	PANDUIT	A/R
	SCE-60EL4818LPPLM102	MOD ENCLOSURE PER DWGSCE-60EL4818LPPLM102	SAGINAW	1
	SCE-60P48	SUB PANEL, 56 X 44 X 0.88STEEL, PAINTED WHITE	SAGINAW	1
	THT-19-435-1-PR	LABEL, SPEC/FUSE/TORQUEENGRAVED, SILVER, 3 X 2	ICC	5
	THT-19-439-HFC	LABEL, WARNING - RISK OF FIREOR ELECTRICAL SHOCK	ICC	1
	THT-19-439-M	LABEL, WARNING - THIS PANELHAS MULTIPLE SOURCES	ICC	1
	THT-5-435-10-PR	LABEL, ID, ENGRAVEDSILVER, 1 X 0.5	ICC	A/R
	THT-80-427-5-PR	LABEL, SELF-LAM SMALLENGRAVED, 0.5 X 0.75	ICC	A/R
	THT-9-427-10-PR	LABEL, SELF LAM (LARGE)ENGRAVED, 1 X 1.4375	ICC	A/R

NO.	DATE	REVISIONS	DRAWN BY	CHECKED BY
0	2/12/23	RELEASE FOR CONSTRUCTION	ARM	FJS

FUEL TECH
Technologies to enable clean efficient energy
FUEL TECH, INC. 27601 BELLA VISTA PKWY, WARRENVILLE, IL 60555

UC DAVIS MEDICAL CENTER
SACRAMENTO, CA

HEATER PANEL
BILL OF MATERIAL

APPROVED BY: SMM
CHECKED BY: FJS
DRAWN BY: JMA
DATE: 8/5/22
SCALE: NONE
SIZE: D
DRAWING NO. 1294P-E03-06

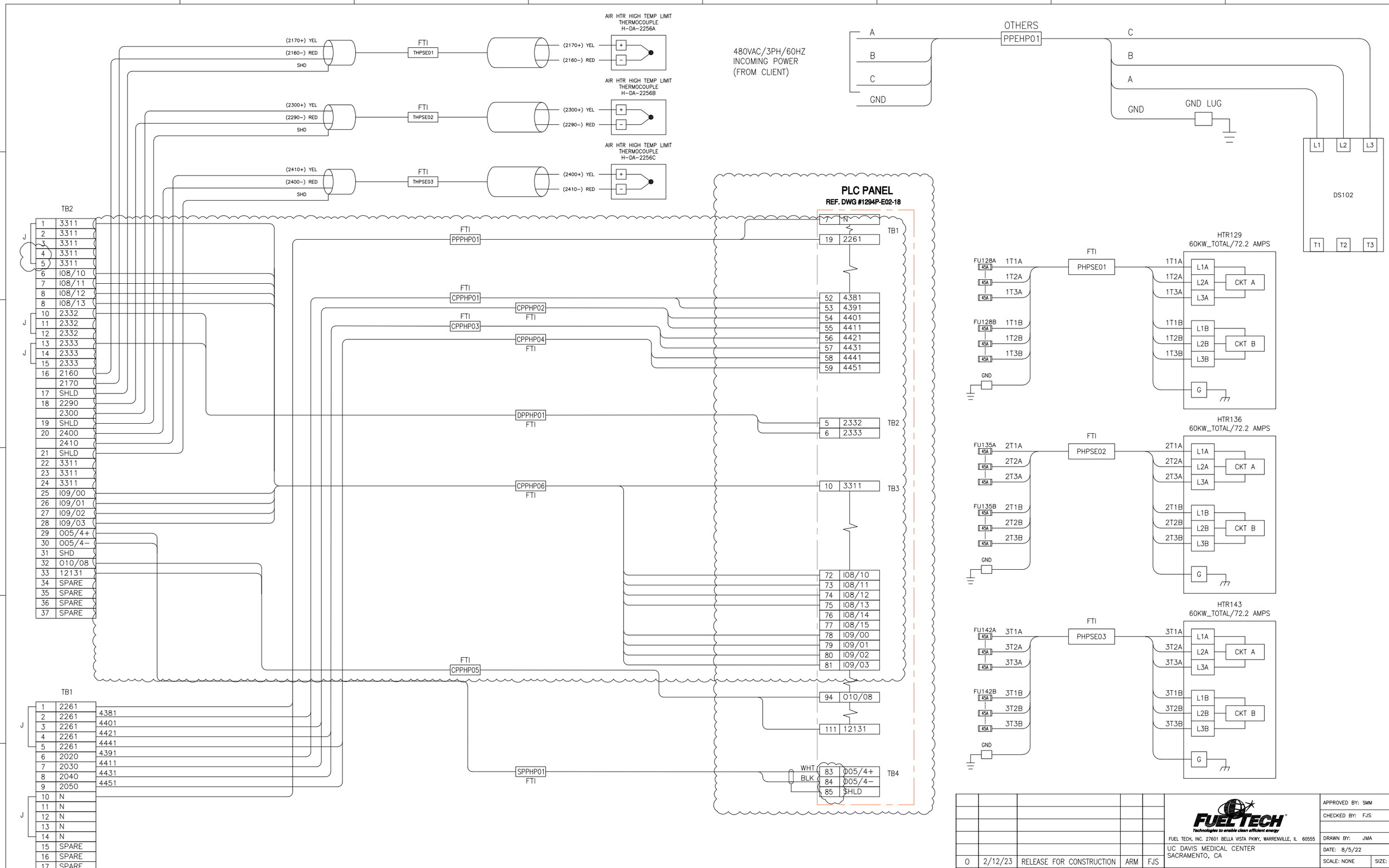

NO.	DATE	REVISIONS	DRAWN BY	CHECKED BY
0	2/12/23	RELEASE FOR CONSTRUCTION	ARM	FJS

FUEL TECH
Technologies to enable clean efficient energy
FUEL TECH, INC. 27601 BELLA VISTA PKWY, WARRENVILLE, IL 60555

UC DAVIS MEDICAL CENTER
SACRAMENTO, CA

HEATER PANEL
INTERCONNECTION W/D

APPROVED BY: SMM
CHECKED BY: FJS
DRAWN BY: JMA
DATE: 8/5/22
SCALE: NONE
SIZE: D
DRAWING NO. 1294P-E03-07

INTERCONNECT CABLE/WIRE LIST

CABLE NO.	NO. COND.	WIRE SIZE	FROM		TO		WIRE NUMBERS	CABLING BY
			LOCATION	DEVICE	LOCATION	DEVICE		
PPEHP01	CLIENT-DEFINED	CLIENT-DEFINED	CLIENT	480VAC,3PH,60HZ SOURCE	HEATER PANEL	DS102	A B C GND	OTHERS
PHPSE01	6+1	#8 AWG 600V 90C MIN + #10 AWG GND	HEATER PANEL	FU128A, FU128B	HTR129	H-PA-2255A	1T1A 1T2A 1T3A 1T1B 1T2B 1T3B GND	FTI
PHPSE02	6+1	#8 AWG 600V 90C MIN + #10 AWG GND	HEATER PANEL	FU135A, FU135B	HTR136	H-PA-2255B	2T1A 2T2A 2T3A 2T1B 2T2B 2T3B GND	FTI
PHPSE03	6+1	#8 AWG 600V 90C MIN + #10 AWG GND	HEATER PANEL	FU142A, FU142B	HTR142	H-PA-2255C	3T1A 3T2A 3T3A 3T1B 3T2B 3T3B GND	FTI
PPPHP01	2 WIRE CABLE	#14 AWG 600V 90C MIN	PLC PANEL	TB1	HEATER PANEL	TB1	2261 N	FTI
DPPHP01	2 WIRE CABLE	#14 AWG 600V 90C MIN	PLC PANEL	TB2	HEATER PANEL	TB2	2332 2333	FTI
CPPHP01	2 WIRE CABLE	#14 AWG 600V 90C MIN	PLC PANEL	TB2	HEATER PANEL	TB1	4381 4391	FTI
CPPHP02	2 WIRE CABLE	#14 AWG 600V 90C MIN	PLC PANEL	TB2	HEATER PANEL	TB1	4401 4411	FTI
CPPHP03	2 WIRE CABLE	#14 AWG 600V 90C MIN	PLC PANEL	TB2	HEATER PANEL	TB1	4421 4431	FTI
CPPHP04	2 WIRE CABLE	#14 AWG 600V 90C MIN	PLC PANEL	TB2	HEATER PANEL	TB1	4441 4451	FTI
CPPHP05	2 WIRE CABLE	#14 AWG 600V 90C MIN	PLC PANEL	TB3	HEATER PANEL	TB2	12131 010/08	FTI
CPPHP06	9 WIRE CABLE	#14 AWG 600V 90C MIN	PLC PANEL	TB3	HEATER PANEL	TB2	3311 I08/10 I08/11 I08/12 I08/13 I09/00 I09/01 I09/02 I09/03	FTI
THPSE01	1 PR 20 AWG SHLD CABLE	TYPE KX THERMOCOUPLE WIRE 20 AWG MIN	HEATER PANEL	TB2	H-DA-2256A	AIR HTR HIGH TEMP LIMIT THERMOCOUPLE	2170+ 2160- SHLD	FTI
THPSE02	1 PR 20 AWG SHLD CABLE	TYPE KX THERMOCOUPLE WIRE 20 AWG MIN	HEATER PANEL	TB2	H-DA-2256B	AIR HTR HIGH TEMP LIMIT THERMOCOUPLE	2300+ 2290- SHLD	FTI
THPSE03	1 PR 20 AWG SHLD CABLE	TYPE KX THERMOCOUPLE WIRE 20 AWG MIN	HEATER PANEL	TB2	H-DA-2256C	AIR HTR HIGH TEMP LIMIT THERMOCOUPLE	2410+ 2400- SHLD	FTI
SPPHP01	2 WIRE CABLE	#16 AWG SIGNAL SHIELDED	PLC PANEL	TB4	HEATER PANEL	TB2	005/4+ 005/4- SHLD	FTI

NO.	DATE	REVISIONS	DRAWN BY	CHECKED BY
0	2/12/23	RELEASE FOR CONSTRUCTION	ARM	FJS

FUEL TECH
Technologies to enable clean efficient energy
FUEL TECH, INC. 27601 BELLA VISTA PKWY, WARRENVILLE, IL 60555

UC DAVIS MEDICAL CENTER
SACRAMENTO, CA

HEATER PANEL
CABLE LISTING

APPROVED BY: SMM
CHECKED BY: FJS
DRAWN BY: JMA
DATE: 8/5/22
SCALE: NONE
SIZE: D
DRAWING NO. 1294P-E03-08

FRONT VIEW

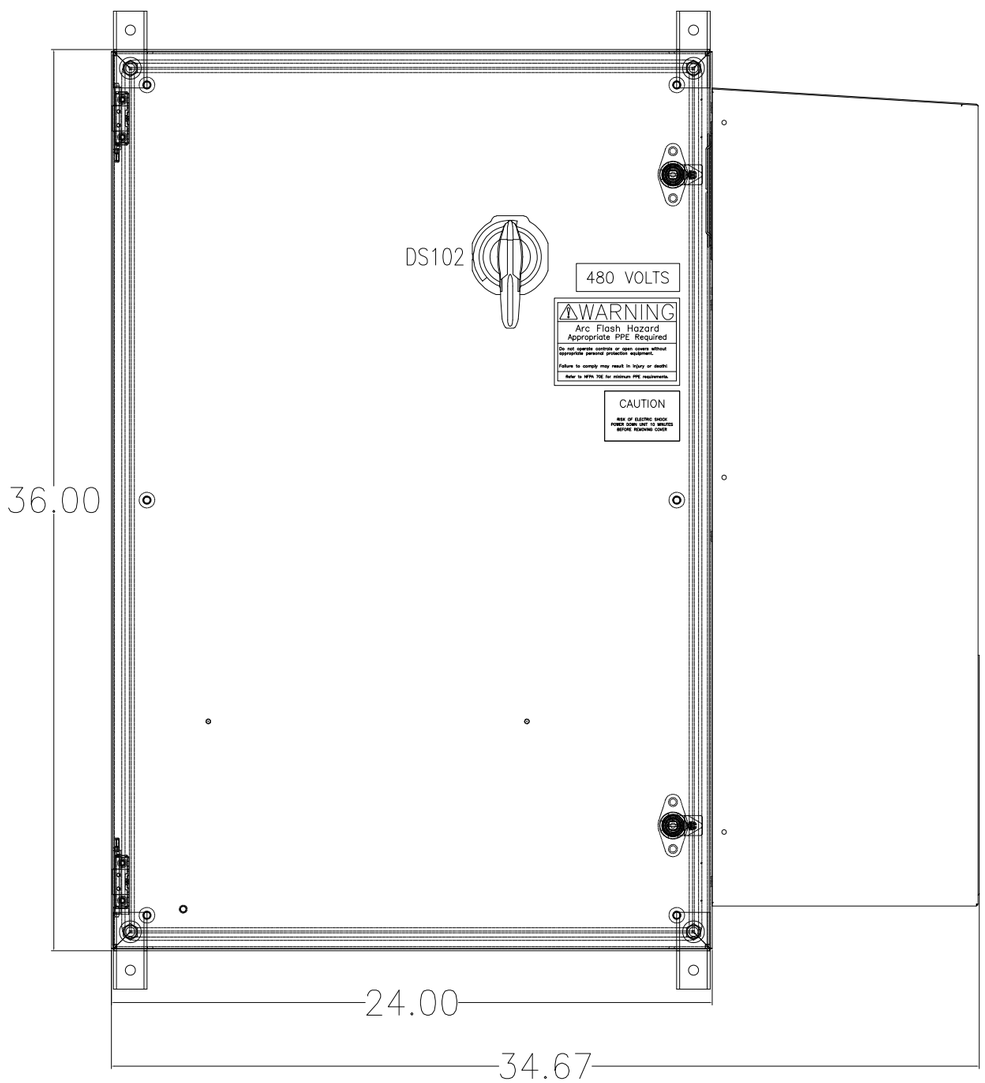

RIGHT SIDE VIEW

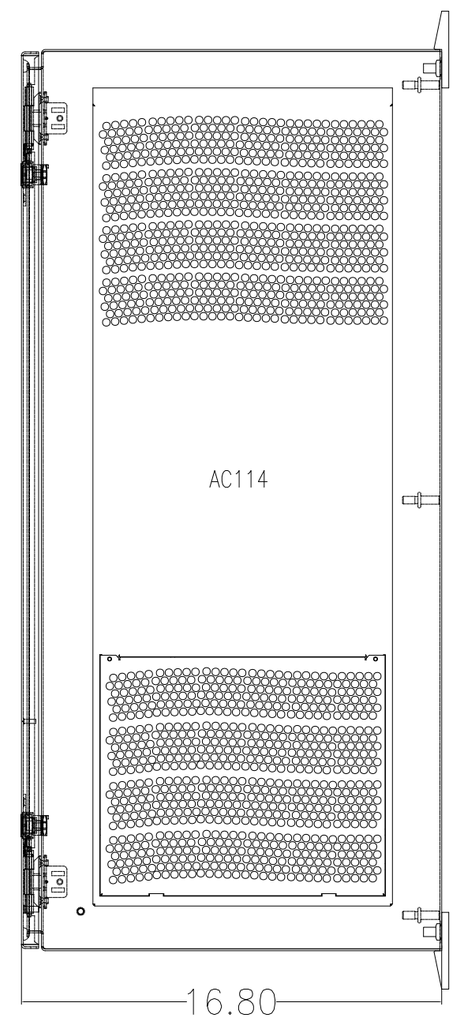

THT–19–413–1–PR

The Industrial Controls Company, Inc.
BETTER THINKING. INSIDE THE BOX.
N56 W24842 Corporate Circle Sussex, WI 53089
480 VOLTS
38.3 FLA (TOTAL)
60 CYCLES
N/A FLA (LARGEST MOTOR)
3 PHASE
1294–E04 DRWG. NO.
SHORT CIRCUIT CURRENT 50 kA RMS
SYMMETRICAL, 480 V MAXIMUM
TYPE 4 ENCLOSURE

Fuse ID	Mfg.	Fuse# or Equivalent	Volts
FU102	LITTELFUSE	JTD60ID	600
FU114–115	LITTELFUSE	KLDR4	600

USE COPPER CONDUCTORS ONLY

PART ID	PART NUMBER	TORQUE (IN/LB)	TEMP (C)
DS102	194R–J60–1753	35	90
TB's	1492–J4	9.0	90
TB's	1492–JG4	9.0	90
TB's	1492–J6	14.2	90
GND BAR	PK12GTA	20 (14–10GA)	90
GND BAR	PK12GTA	25 (8GA)	90
GND BAR	PK12GTA	35 (6–4GA)	90

USE COPPER CONDUCTORS ONLY

PART ID	PART NUMBER	TORQUE (IN/LB)	TEMP (C)
GND LUG	L70	35 (14–10GA)	90
GND LUG	L70	40 (8GA)	90
GND LUG	L70	45 (4–6GA)	90

THT–19–435–1–HFC

WARNING

RISK OF FIRE OR ELECTRICAL SHOCK

THE OPENING OF THE BRANCH–CIRCUIT PROTECTIVE DEVICE MAY BE AN INDICATION THAT A FAULT CURRENT HAS BEEN INTERRUPTED. ALL CURRENT– CARRYING PARTS AND OTHER COMPONENTS PROTECTED BY THIS DEVICE SHOULD BE EXAMINED AND REPLACED IF DAMAGED. IF BURNOUT OF A CURRENT ELEMENT OF AN OVERLOAD RELAY OCCURS, THE COMPLETE OVERLOAD RELAY MUST BE REPLACED.

99454

WARNING

Arc Flash Hazard
Appropriate PPE Required

Do not operate controls or open covers without appropriate personal protection equipment.

Failure to comply may result in injury or death!

Refer to NFPA 70E for minimum PPE requirements.

THT–19–439–DC

CAUTION

RISK OF ELECTRIC SHOCK
POWER DOWN UNIT 10 MINUTES
BEFORE REMOVING COVER

THT–19–439–M

WARNING

THIS PANEL HAS MULTIPLE SOURCES OF POTENTIAL –– DISCONNECT ALL SOURCES BEFORE OPENING DOOR

152371

480 VOLTS

NO.	DATE	REVISIONS	DRAWN BY	CHECKED BY
0	2/12/23	RELEASE FOR CONSTRUCTION	ARM	FJS

FUEL TECH
Technologies to enable clean efficient energy
FUEL TECH, INC. 27601 BELLA VISTA PKWY, WARRENVILLE, IL 60555

UC DAVIS MEDICAL CENTER
SACRAMENTO, CA

BLOWER PANEL
CABINET LAYOUT

APPROVED BY: SMM
CHECKED BY: FJS
DRAWN BY: JMA
DATE: 8/5/22
SCALE: NONE
SIZE: D
DRAWING NO. 1294P–E04–01

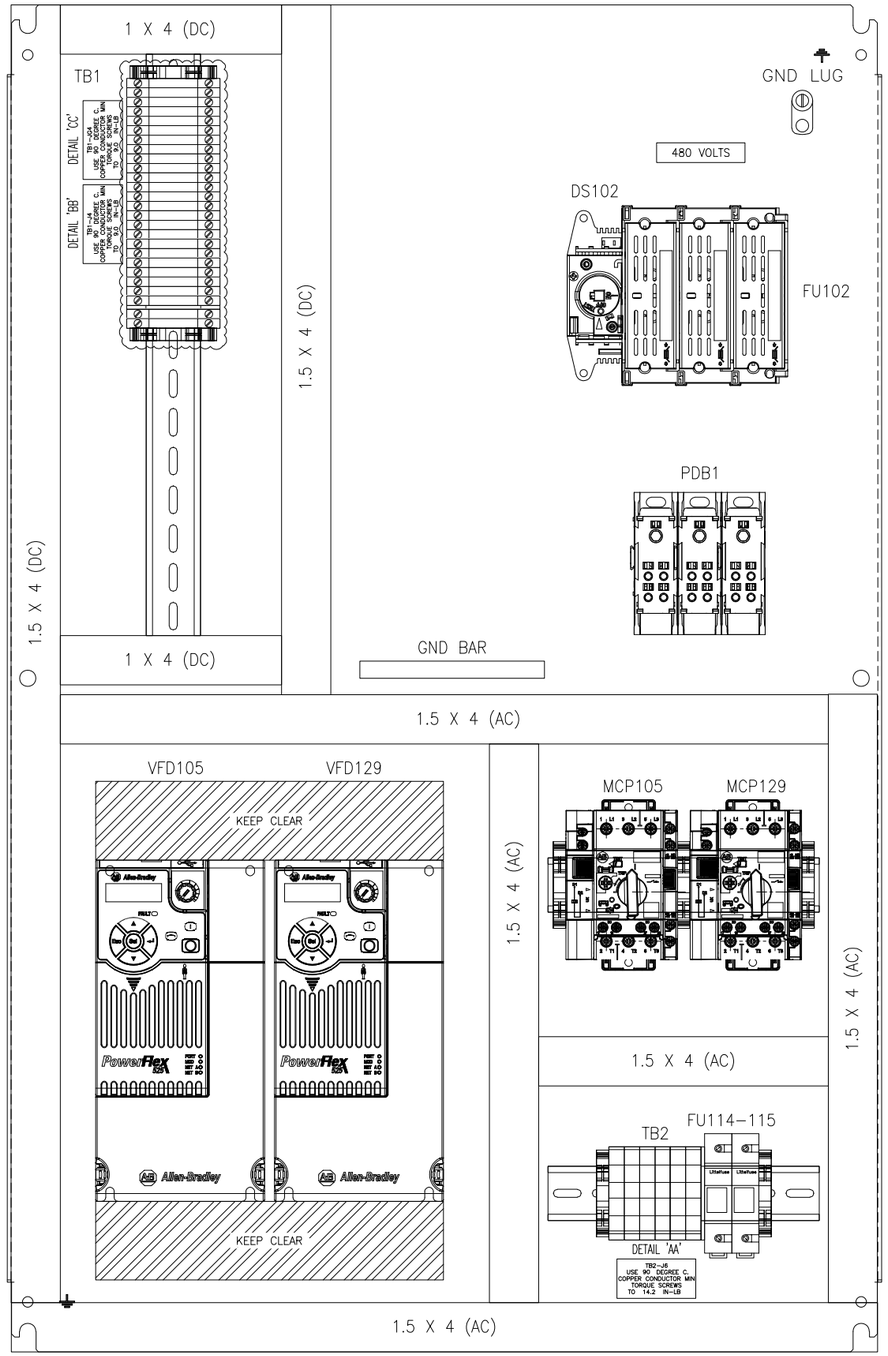

	24VDC TB1	
1	2333	
2	3311	
3	3311	
4	3311	
5	3311	
6	3311	
7	3311	
8	3311	
9	4341	
10	4351	
11	4361	
12	4371	
13	I07/04	
14	I07/05	
15	I07/06	
16	I07/07	
17	I09/05	
18	O05/2+	
19	O05/2-	
20	SHLD	**
21	O05/3+	
22	O05/3-	
23	SHLD	**
24	SHLD	**
25	SPARE	
26	SPARE	
27	SPARE	
28	SPARE	

25 @ 1492-J4

3 @ 1492-JG4

	HIGH VOLTAGE TB2	
1	1T1	*
2	1T2	*
3	1T3	*
4	2T1	*
5	2T2	*
6	2T3	*

*6 @ 1492-J6

44315

480 VOLTS

THT-17-413-3-PR

DETAIL 'AA'

TB2-J6
USE 90 DEGREE C.
COPPER CONDUCTOR MIN
TORQUE SCREWS
TO 14.2 IN-LB

DETAIL 'BB'

TB1-J4
USE 90 DEGREE C.
COPPER CONDUCTOR MIN
TORQUE SCREWS
TO 9.0 IN-LB

DETAIL 'CC'

TB1-JG4
USE 90 DEGREE C.
COPPER CONDUCTOR MIN
TORQUE SCREWS
TO 9.0 IN-LB

NO.	DATE	REVISIONS	DRAWN BY	CHECKED BY
0	2/12/23	RELEASE FOR CONSTRUCTION	ARM	FJS

FUEL TECH
Technologies to enable clean efficient energy
FUEL TECH, INC. 27601 BELLA VISTA PKWY, WARRENVILLE, IL 60555

UC DAVIS MEDICAL CENTER
SACRAMENTO, CA

BLOWER PANEL
PANEL LAYOUT

APPROVED BY: SMM
CHECKED BY: FJS
DRAWN BY: JMA
DATE: 8/5/22
SCALE: NONE
SIZE: D
DRAWING NO. 1294P-E04-02

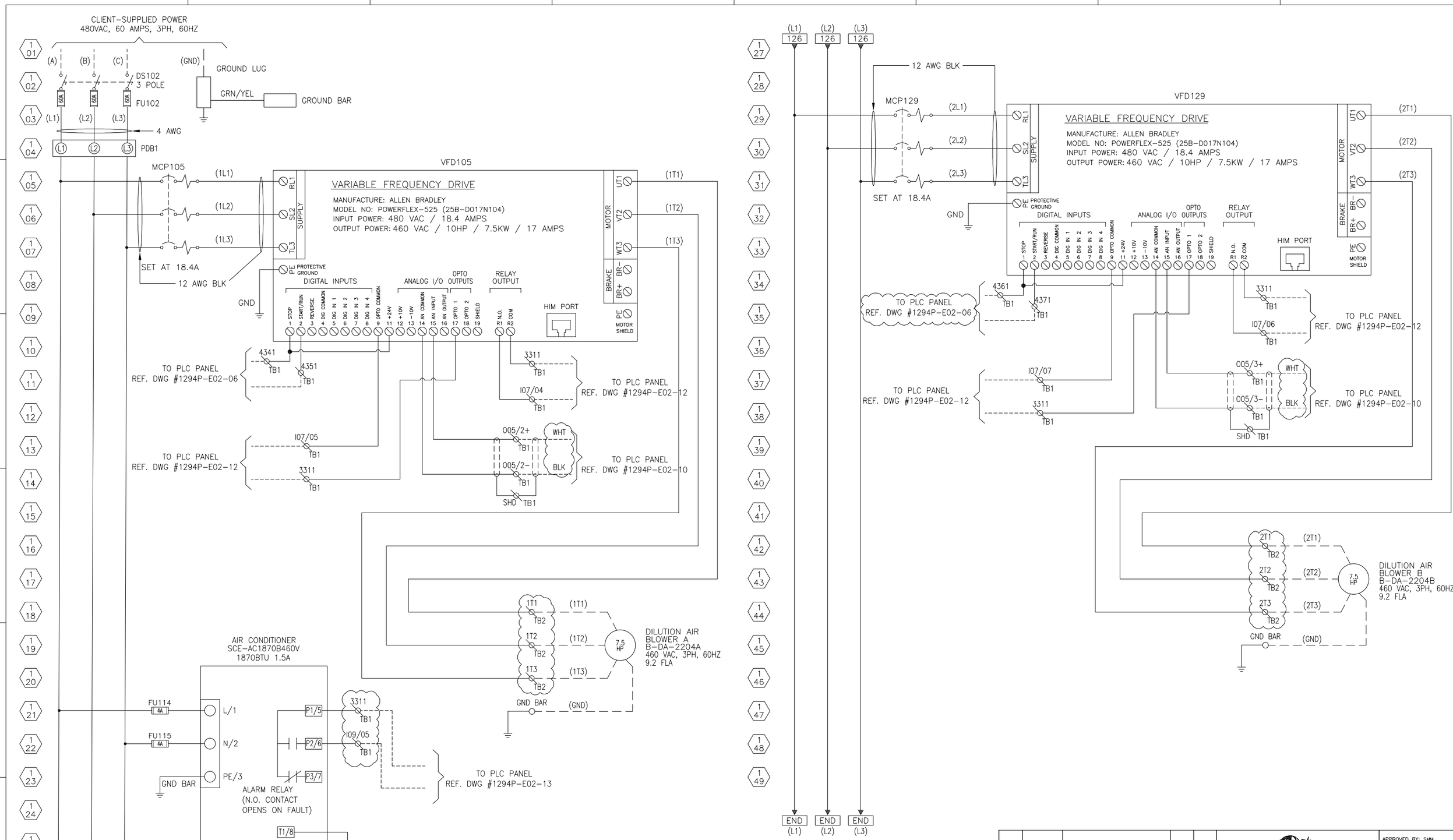

NO.	DATE	REVISIONS	DRAWN BY	CHECKED BY
0	2/12/23	RELEASE FOR CONSTRUCTION	ARM	FJS

FUEL TECH
Technologies to enable clean efficient energy
FUEL TECH, INC. 27601 BELLA VISTA PKWY, WARRENVILLE, IL 60555

UC DAVIS MEDICAL CENTER
SACRAMENTO, CA

BLOWER PANEL
SCHEMATIC SHEET 1 OF 1

APPROVED BY: SMM
CHECKED BY: FJS
DRAWN BY: JMA
DATE: 8/5/22
SCALE: NONE
SIZE: D
DRAWING NO.
1294P-E04-03

INTENTIONALLY BLANK
(FOR FUTURE USE IF NEEDED)

NO.	DATE	REVISIONS	DRAWN BY	CHECKED BY
0	2/12/23	RELEASE FOR CONSTRUCTION	ARM	FJS

FUEL TECH
Technologies to enable clean efficient energy
FUEL TECH, INC. 27601 BELLA VISTA PKWY, WARRENVILLE, IL 60555

UC DAVIS MEDICAL CENTER
SACRAMENTO, CA

BLOWER PANEL
FUTURE

APPROVED BY: SMM
CHECKED BY: FJS
DRAWN BY: JMA
DATE: 8/5/22
SCALE: NONE
SIZE: D
DRAWING NO.
1294P-E04-04

DEVICE ID	PART NUMBER	DESCRIPTION	MANUFACTURER	QTY
AC114	SCE-AC1870B460V	AC, 1870 BTUH, TYPE 3R/4/12460/1/60 1.5A RUN, 5.0A START	SAGINAW	1
DS102	194R-J60-1753	DISCONNECT SWITCH, FUSIBLE, 3-POLE, 60A, THRU-DOOR ROTARY	AB	1
DS102	194R-PY	OPERATING HANDLE, DISCONNECTSWITCH, THRU-DOOR ROTARY	AB	1
DS102	194R-S2	OPERATING SHAFT, DISCONNECT SWITCH, 21 LONG, USED ON 194R-R	AB	1
FU102	JTD60ID	FUSE, CLASS J, 60A TIME-DELAY600V AC/300V DC, INDICATING	LITTELFUSE	3
FU114-115	KLDR4	FUSE, CLASS CC, 4 AMPS, 600V,TIME-DELAY, NON-INDICATING	LITTELFUSE	2
FU114-115	LPSC002ID	FUSE HOLDER, 2-POLE, 30ACLASS CC, 600V AC/DC WBFI	LITTELFUSE	1
GND BAR	PK12GTA	LOAD CENTER EQUIPMENT GROUNDBAR ASSY	SCHNEIDER ELECTRIC	1
GND LUG	L70	GROUND LUG, 14 SOL-4 STRANDED1 CONDUCTOR	T&B	1
MCP105,MCP129	140MT-D9E-C25	MCP, 18-25A, FRAME D	AB	2
PDB1	EPBCP45	PWR DIST BLOCK, 1-POLE, 200 AMPS, 1 LINE SIDE OPENING PER PO	MARATHON SP	3
TB1	1492-CJJ8-10	JUMPER, TERMINAL BLOCK 10-POLEINSULATED, 8MM SCREW CENTER	AB	1
TB1	1492-J4	TERMINAL BLOCK, GRAY, SCREW35A, 600V AC/DC, 22 - 10 AWG	AB	25
TB1	1492-JG4	TERMINAL BLOCK, GRN/YEL, SCREW22 - 10 AWG, GROUND	AB	3
TB1,TB2	1492-EAJ35	END ANCHOR, TERMINAL BLOCKNORMAL DUTY	AB	7
TB1,TB2	1492-EBJ3	END BARRIER, TERMINAL BLOCKGRAY, USED ON 1492-J	AB	3
TB1,TB2	1492-M6X12-ENG	MARKER CARD, TERMINAL BLOCKENGRAVED, 120/CARD, 1492-J	AB	1
TB2	1492-J6	TERMINAL BLOCK, GRAY, SCREW50A, 600V AC/DC, 22 - 8 AWG	AB	6
VFD105,VFD129	25B-D017N104	VFD, POWERFLEX 525, 480 VAC3-PHASE, 17 AMPS, FRAME C	AB	2
	8760	CABLE, 1 PAIR, 18 AWG, PAIREDSHIELDED, 300 VOLTS, PVC GRAY	BELDEN	A/R
	152371	LABEL, 480V, VOLTAGE LABEL1.125 X 4.125 , BLACK ON ORG	ICC	1
	44315	LABEL, 480V, VOLTAGE LABEL0.5 X 2.25 , BLACK ON ORANGE	ICC	1
	99454	LABEL, WARNING LABELARC FLASH, 3.5 H X 5 W	BRADY	1
	1492-M8X5-ENG	MARKER CARD, TERMINAL BLOCKENGRAVED, 160/CARD, 1492-J/-L	AB	A/R
	98.300.1800.0	DIN RAIL SLOTTED, WIELAND35MM X 7.5MM X 2M	WIELAND	A/R
	C1.5WH6	COVER, PANEL CHANNEL, WHITE1.5 INCH DUCT COVER	PANDUIT	A/R
	C1WH6	COVER, PANEL CHANNEL, WHITE1 INCH DUCT COVER	PANDUIT	A/R
	CP3624	SUB PANEL, 34.20 X 22.20STEEL, WHITE FINISH	HOFFMAN	1
	CSD362416M100	ENCLOSURE PER MOD DWGCSD362416	HOFFMAN	1
	CMFK	WALL MOUNTING HARDWARE KIT	HOFFMAN	1
	G1.5X4WH6	PANEL CHANNEL, 1.5X4 WHITE	PANDUIT	A/R
	G1X4WH6	PANEL CHANNEL, 1X4 WHITE	PANDUIT	A/R
	THT-19-435-1-PR	LABEL, SPEC/FUSE/TORQUEENGRAVED, SILVER, 3 X 2	ICC	3
	THT-19-439-DC	LABEL CAUTION RISK OF ELECTRICSHOCK POWER DOWN UNIT 10 MIN	ICC	1
	THT-19-439-HFC	LABEL, WARNING - RISK OF FIREOR ELECTRICAL SHOCK	ICC	1
	THT-19-439-M	LABEL, WARNING - THIS PANELHAS MULTIPLE SOURCES	ICC	1
	THT-5-435-10-PR	LABEL, ID, ENGRAVEDSILVER, 1 X 0.5	ICC	A/R
	THT-80-427-5-PR	LABEL, SELF-LAM SMALLENGRAVED, 0.5 X 0.75	ICC	A/R
	THT-9-427-10-PR	LABEL, SELF LAM (LARGE)ENGRAVED, 1 X 1.4375	ICC	A/R

NO.	DATE	REVISIONS	DRAWN BY	CHECKED BY
0	2/12/23	RELEASE FOR CONSTRUCTION	ARM	FJS

FUEL TECH
Technologies to enable clean efficient energy
FUEL TECH, INC. 27601 BELLA VISTA PKWY, WARRENVILLE, IL 60555

UC DAVIS MEDICAL CENTER
SACRAMENTO, CA

BLOWER PANEL
BILL OF MATERIALS

APPROVED BY: SMM
CHECKED BY: FJS
DRAWN BY: JMA
DATE: 8/5/22
SCALE: NONE
SIZE: D
DRAWING NO. 1294P-E04-05

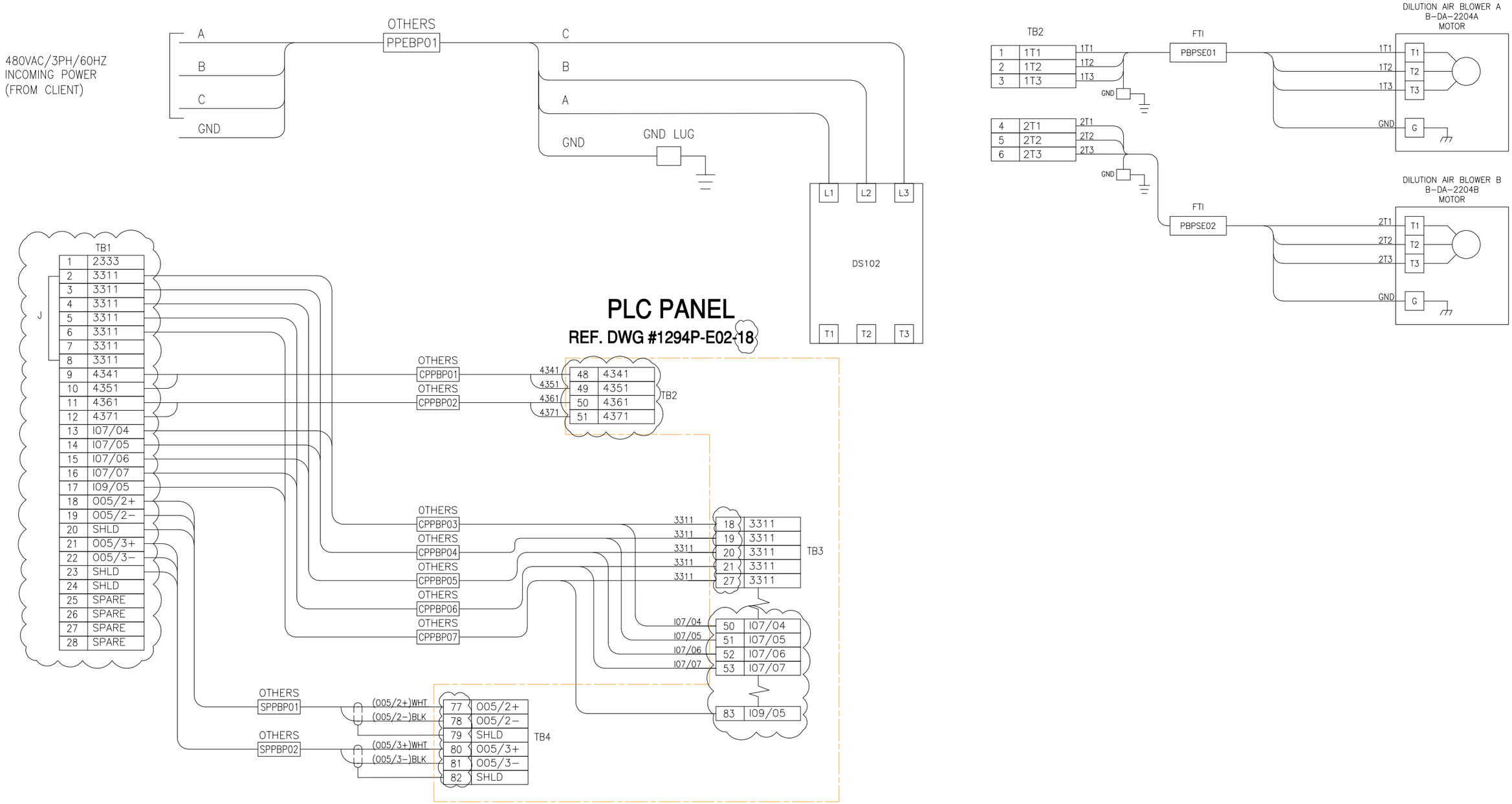

NO.	DATE	REVISIONS	DRAWN BY	CHECKED BY
0	2/12/23	RELEASE FOR CONSTRUCTION	ARM	FJS

FUEL TECH
Technologies to enable clean efficient energy
FUEL TECH, INC. 27601 BELLA VISTA PKWY, WARRENVILLE, IL 60555

UC DAVIS MEDICAL CENTER
SACRAMENTO, CA

BLOWER PANEL
INTERCONNECTION W/D

APPROVED BY: SMM
CHECKED BY: FJS
DRAWN BY: JMA
DATE: 8/5/22
SCALE: NONE
SIZE: D
DRAWING NO. 1294P-E04-06

INTERCONNECT CABLE/WIRE LIST

CABLE NO.	NO. COND.	WIRE SIZE	FROM		TO		WIRE NUMBERS	CABLING BY
			LOCATION	DEVICE	LOCATION	DEVICE		
PPEBP01	2 + 1	CLIENT-DEFINED	CLIENT	480VAC,3PH,60HZ SOURCE	BLOWER PANEL	DS102	A B C GND	OTHERS
PBPSE01	3+1	#12 AWG 600V 90C MIN	BLOWER PANEL	TB2	B-DA-2204A	DILUTION AIR BLOWER A	1T1 1T2 1T3 GND	FTI
PBPSE02	3+1	#12 AWG 600V 90C MIN	BLOWER PANEL	TB2	B-DA-2204B	DILUTION AIR BLOWER B	2T1 2T2 2T3 GND	FTI
CPPBP01	2 WIRE CABLE	#14 AWG 600V 90C MIN	PLC PANEL	TB2	BLOWER PANEL	TB1	4341 4351	OTHERS
CPPBP02	2 WIRE CABLE	#14 AWG 600V 90C MIN	PLC PANEL	TB2	BLOWER PANEL	TB1	4361 4371	OTHERS
CPPBP03	2 WIRE CABLE	#14 AWG 600V 90C MIN	PLC PANEL	TB3	BLOWER PANEL	TB1	3311 I07/04	OTHERS
CPPBP04	2 WIRE CABLE	#14 AWG 600V 90C MIN	PLC PANEL	TB3	BLOWER PANEL	TB1	3311 I07/05	OTHERS
CPPBP05	2 WIRE CABLE	#14 AWG 600V 90C MIN	PLC PANEL	TB3	BLOWER PANEL	TB1	3311 I07/06	OTHERS
CPPBP06	2 WIRE CABLE	#14 AWG 600V 90C MIN	PLC PANEL	TB3	BLOWER PANEL	TB1	3311 I07/07	OTHERS
CPPBP07	2 WIRE CABLE	#14 AWG 600V 90C MIN	PLC PANEL	TB3	BLOWER PANEL	TB1	3311 I09/05	OTHERS
SPPBP01	2 WIRE CABLE	#16 AWG SIGNAL SHIELDED	PLC PANEL	TB4	BLOWER PANEL	TB1	005/2+ 005/2- SHLD	OTHERS
SPPBP02	2 WIRE CABLE	#16 AWG SIGNAL SHIELDED	PLC PANEL	TB4	BLOWER PANEL	TB1	005/3+ 005/3- SHLD	OTHERS

NO.	DATE	REVISIONS	DRAWN BY	CHECKED BY
0	2/12/23	RELEASE FOR CONSTRUCTION	ARM	FJS

FUEL TECH
Technologies to enable clean efficient energy
FUEL TECH, INC. 27601 BELLA VISTA PKWY, WARRENVILLE, IL 60555

UC DAVIS MEDICAL CENTER
SACRAMENTO, CA

BLOWER PANEL
CABLE LISTING

APPROVED BY: SMM
CHECKED BY: FJS
DRAWN BY: JMA
DATE: 8/5/22
SCALE: NONE
SIZE: D
DRAWING NO. 1294P-E04-07

CUSTOMER APPROVAL

☒ APPROVED FOR PRODUCTION AS DRAWN.

☐ REVISE AS NOTED & RESUBMIT FOR APPROVAL.

SIGNATURE: _____

DATE: April 24, 2023

DRAWING IS NOT VALID UNLESS SIGNED

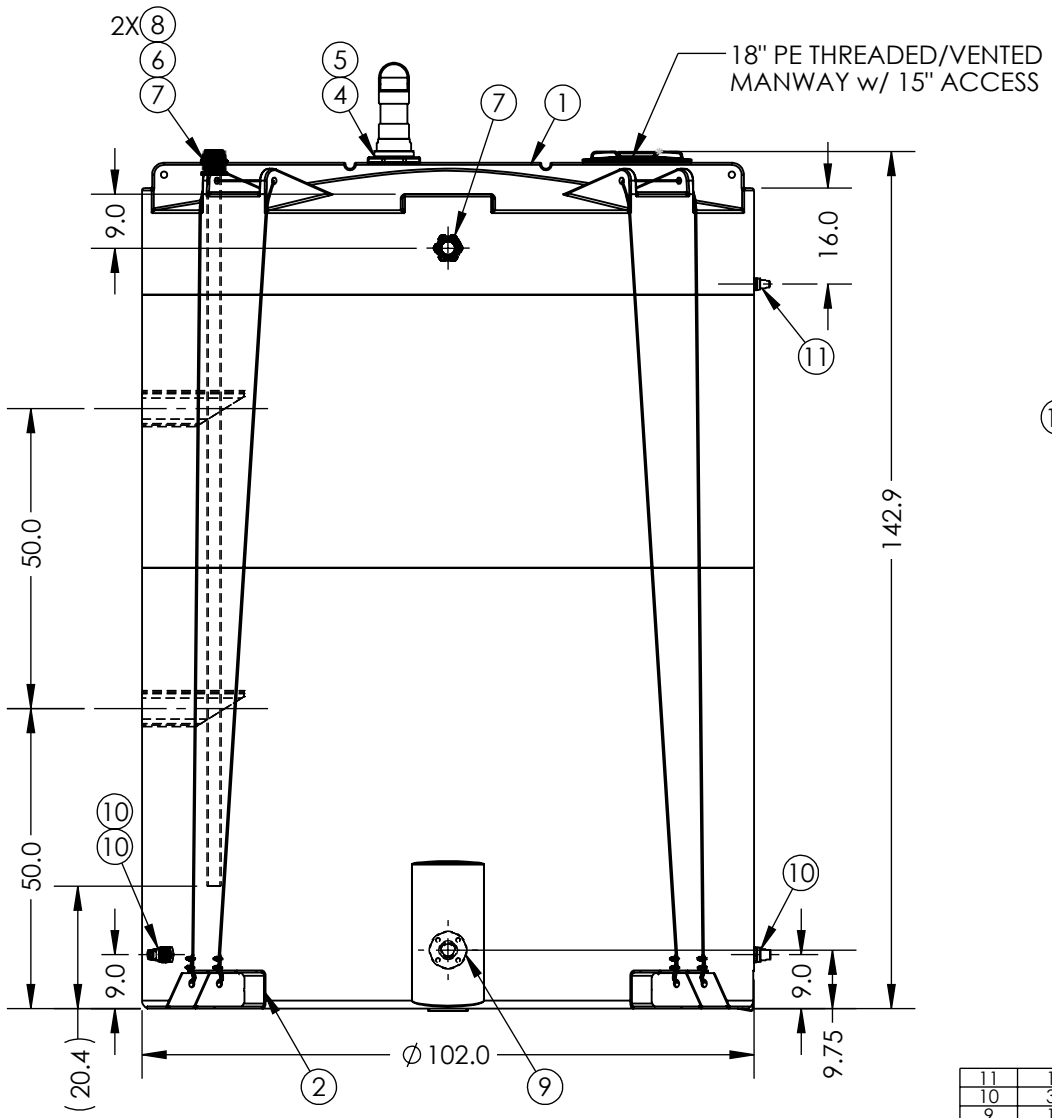

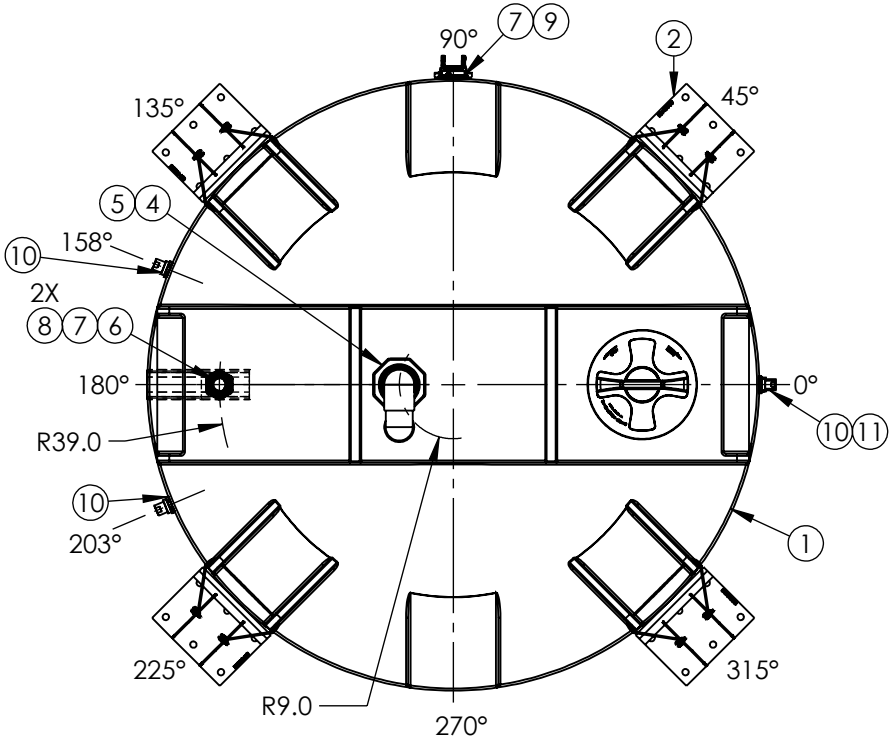

ITEM NO.	QTY.	PART NUMBER	DESCRIPTION	SHOWN	TANK CONFIG.
11	1	34200066	FITTING PVC 1/2IN BH SXT HYWD	YES	YES
10	3	34200179	FTG PVC 1IN BH SXT EPDM HYWD	YES	YES
9	1	34700041	ASM FTG PVC 2IN SLB W/EPDM	YES	YES
8	2	34701162	ASM SUPPORT PE 1IN-4IN PIPE WELDED	YES	YES
7	2	34200015	FTG PVC 2IN BH SXT EPDM	YES	YES
6	10FT	34200050	PIPE PVC 2IN SCH 80	YES	YES
5	1	34700901	ASM SCREEN 1-6IN INSECT U-VENT	NO	YES
4	1	34700260	ASM U-VENT PVC 4IN W/BH & EPDM	YES	YES
3	1	00000174	PROTECTIVE PLASTIC 4000-7500(90" & 102")	NO	YES
2	1	34700314	ASM SEISMIC GS 4500 X 102 1.9 SG	YES	NO
1	1	7420200N97201	ASM TK 4500VNT X 102 HD/NAT 1.9	YES	YES

CUSTOMER: HIP - WOODRIDGE IL

CUSTOMER NO: 023W2541

DO NOT SCALE

STATUS: Released

DRAWN BY BH

SII SNYDER INDUSTRIES
A BRAND OF TANK HOLDING CORP.
(402) 467-5221
www.snydernet.com

TITLE: ASM TK 4500VNT X 102 HD/NAT 1.9

REVISION E

SHEET 1 OF 1

PART NO. 7420200N972

ENG. ID. A024040

***ALL EXTERNAL PIPING MUST BE INDEPENDENTLY SUPPORTED.**
***ONLY BASE FITTINGS TO BE LEFT INSTALLED AT TIME OF SHIPMENT PER SII PROCEDURE.**
***TANKS ORDERED WITH FOAM INSULATION WILL HAVE AN INCREASED DIAMETER OF 4-6 INCHES.**
***Consult Snyder's Guidelines for Use and Installation prior to delivery.**
Available on-line at http://www.snyderindustriestanks.com/Technical

ALL DIMENSIONS ARE IN INCHES, NOMINAL, & SUBJECT TO CHANGE WITHOUT NOTICE.
ALL DIMENSIONS ON ROTATIONAL MOLDED PARTS ARE SUBJECT TO A ± 3% TOLERANCE.

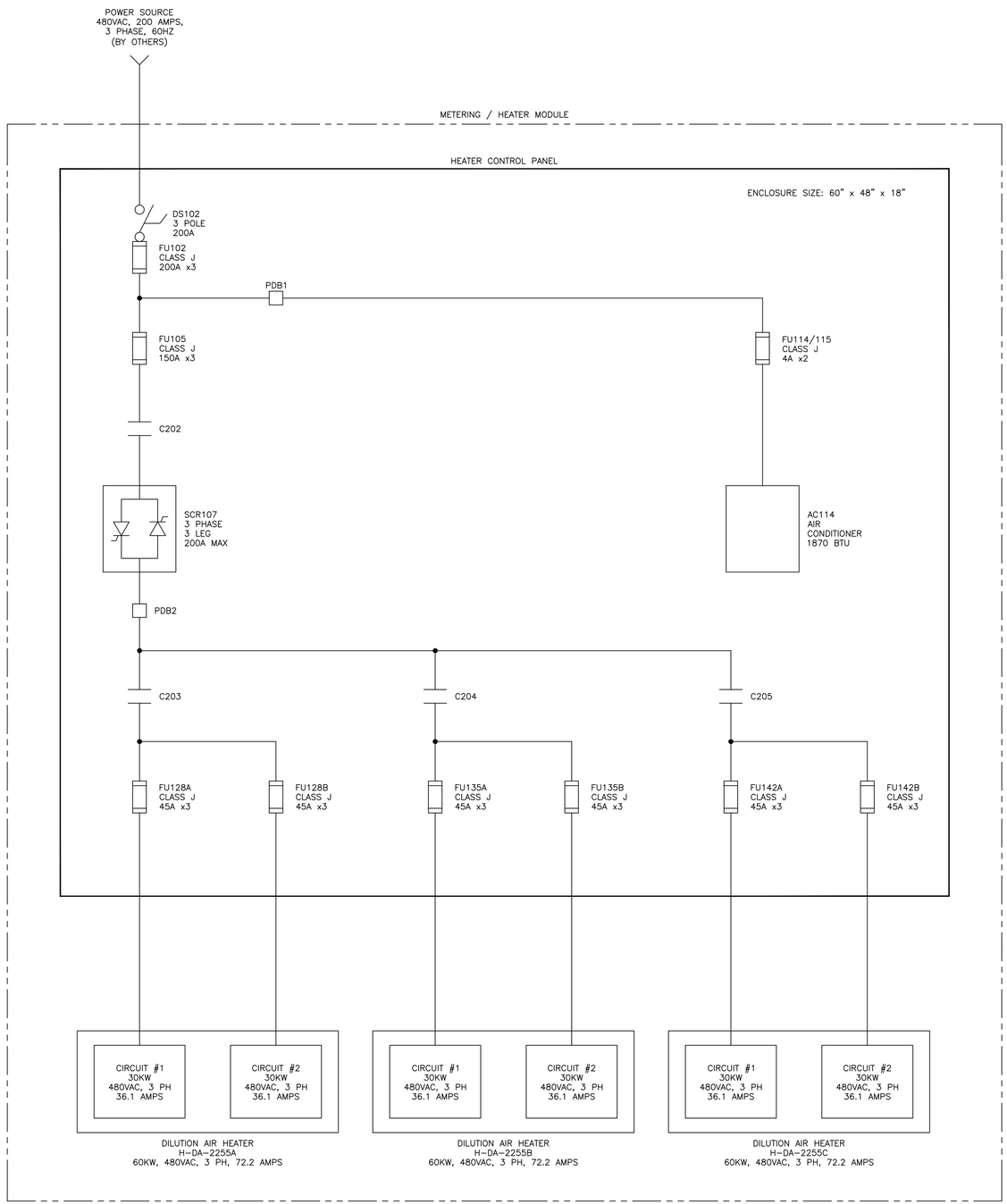

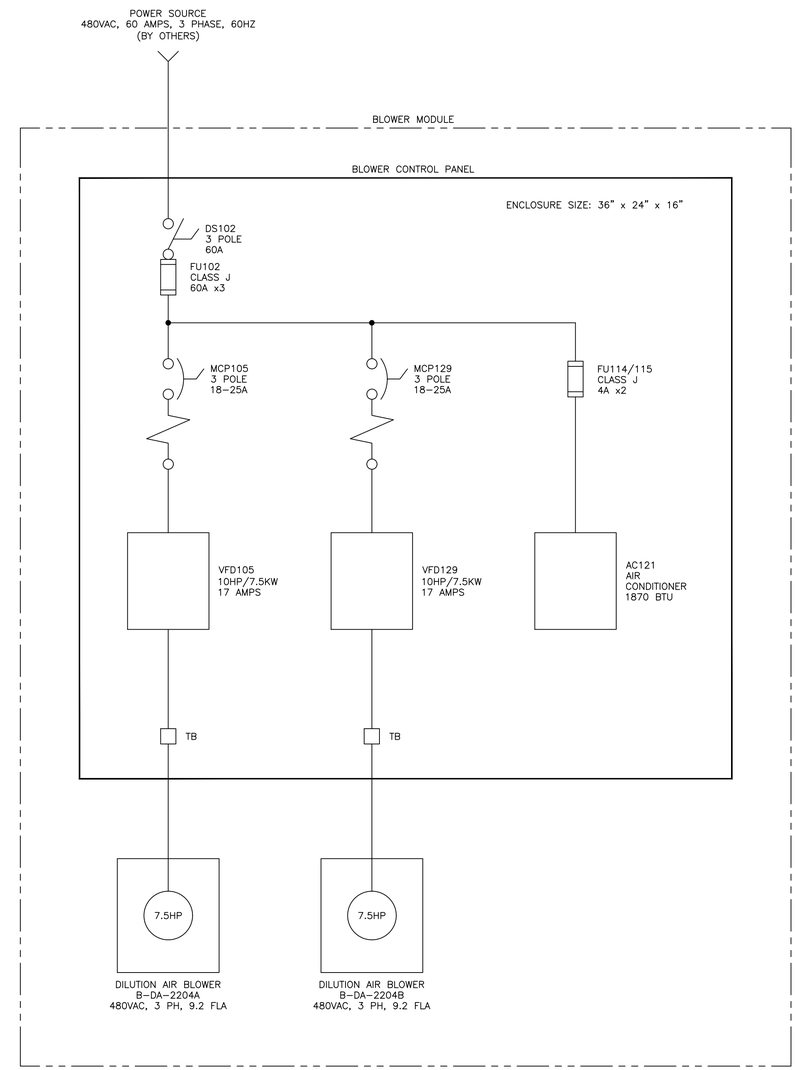

NO.	DATE	REVISIONS	DRAWN BY	CHECKED BY
1	01/26/23	SPLIT HEATER & BLOWER PANEL	FJS	SMM

FUEL TECH
Technologies to enable clean efficient energy
FUEL TECH, INC. 27601 BELLA VISTA PKWY, WARRENVILLE, IL 60555

UC DAVIS MEDICAL CENTER
SACRAMENTO, CA

ULTRA SYSTEM
ELECTRICAL ONE LINE DIAGRAM

APPROVED BY: S MAYHEW
DRAWN BY: F SZEKELY
DATE: 10/27/22
SCALE:
SIZE: D
DRAWING NO. 1294P-E01-03

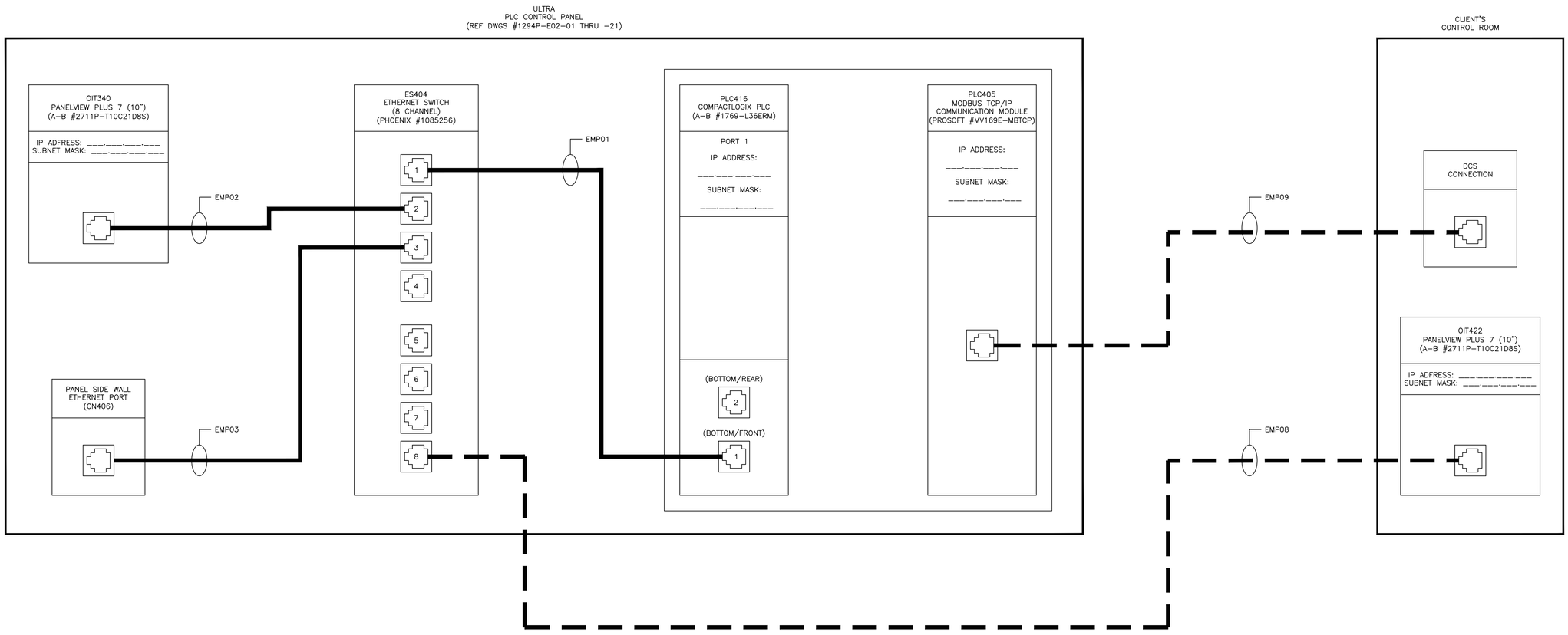

NO.	DATE	REVISIONS	DRAWN BY	CHECKED BY
0	02/02/23	INITIAL DESIGN	FJS	SMM

FUEL TECH
Technologies to enable clean efficient energy
FUEL TECH, INC. 27601 BELLA VISTA PKWY, WARRENVILLE, IL 60555

UC DAVIS MEDICAL CENTER
SACRAMENTO, CA

ULTRA SYSTEM
DATA COMMUNICATIONS DIAGRAM

APPROVED BY: S MAYHEW
DRAWN BY: F SZEKELY
DATE: 02/02/23
SCALE:
SIZE: D
DRAWING NO.
1294P-E01-04

INSTRUMENT IDENTIFICATION TABLE

	FIRST LETTER		SUCCEEDING LETTERS		
	MEASURED OR INITIATING VARIABLE	MODIFIER	READOUT OR PASSIVE FUNCTION	OUTPUT FUNCTION	MODIFIER
A	ANALYSIS		ALARM		
B	BURNER, COMBUSTION		USER'S CHOICE	USER'S CHOICE	USER'S CHOICE
C	CONDUCTIVITY			CONTROL	CLOSED
D	DENSITY	DIFFERENTIAL			DIVERT
E	VOLTAGE		SENSOR (PRIMARY ELEMENT)		
F	FLOW RATE	RATIO (FRACTION)			FORWARD
G	USER'S CHOICE		GLASS, VIEWING DEVICE		GAUGE
H	HAND				HIGH, OPEN
I	CURRENT (ELECTRIC)		INDICATE		
J	POWER	SCAN			
K	TIME, TIME SCHEDULE	TIME RATE OF CHANGE		CONTROL STATION	
L	LEVEL		LIGHT		LOW, CLOSED
M	USER'S CHOICE	MOMENTARY			MIDDLE, INTERMEDIATE
N	USER'S CHOICE		USER'S CHOICE	USER'S CHOICE	USER'S CHOICE
O	USER'S CHOICE		ORIFICE, RESTRICTION		OPEN
P	PRESSURE, VACUUM		POINT (TEST) CONNECTION		
Q	QUANTITY	INTEGRATE, TOTALIZE			
R	RADIATION		RECORD		REVERSE
S	SPEED, FREQUENCY	SAFETY		SWITCH	
T	TEMPERATURE			TRANSMIT	
U	MULTIVARIABLE		MULTIFUNCTION	MULTIFUNCTION	MULTIFUNCTION
V	VIBRATION, MECHANICAL ANALYSIS			VALVE, DAMPER, LOUVER	
W	WEIGHT, FORCE		WELL		
X	UNCLASSIFIED	X AXIS	UNCLASSIFIED	UNCLASSIFIED	UNCLASSIFIED
Y	EVENT, STATE OR PRESENCE	Y AXIS		RELAY, COMPUTE, CONVERT	
Z	POSITION, DIMENSION	Z AXIS		DRIVER, ACTUATOR, UNCLASSIFIED FINAL CONTROL ELEMENT	

SYSTEM CODES

AA – ANHYDROUS AMMONIA
AHC – ACOUSTIC HORN CLEANER
AW – AQUEOUS AMMONIA (19%)
CA – COMBUSTION AIR
CW – COOLING WATER
DW – DILUTION WATER
DA – DILUTION AIR
FW – FLUSH WATER
DAG – DILUTE AMMONIA GAS
HA – HERT AIR
IA – INSTRUMENT AIR
NG – NATURAL GAS
OFA – SECONDARY/TERTIARY AIR
OIL – OIL
PA – PRIMARY AIR
PC – PULVERIZED COAL
PW – PROCESS WATER
SA – SERVICE AIR
SB – SOOT BLOWER
UE – UREA (SOLUTION)
UED – UREA PRILL, DRY
FG – FLUE GAS
OX – OXYGEN

COMPONENT TAGGING

XX – AAA – XXX – XX XX X

UNIT (OPT'L) — DEVICE/ EQUIP/ COMPONENT — SYSTEM (UE/DW)

EXAMPLE: 01–P–UE–0101A

OPTIONAL FOR DUPLEX/REDUNDANT "A", "B" OR SERIES
LOOP
UNIQUE ID

DEVICE/EQUIPMENT INITIALS

AC – ACCUMULATOR
AG – AGITATOR/MIXER
AH – SONIC HORN
B – BLOWER
DI – DIAPHRAGM ISOLATOR
EJ – EXPANSION JOINT
FIL – FILTER
H – HEATER
TDL – TUNABLE DIODE LASER
PRB – PROBE
PD – PULSATION DAMPENER
INJ – INJECTOR
LPA – LARGE PARTICLE ASH SCREEN
M – MOTOR
MX – STATIC MIXER
P – PUMP
SCW – SCREW CONVEYOR
SIL – SILENCER
STR – STRAINER
TNK – TANK
CYC – CYCLONE
C – COMPRESSOR
V – VESSEL

INSTRUMENT TAGGING

XXX
XX
XXXX

INSTRUMENT (PIT, FIT, ETC.)
SYSTEM CODE (UE, SA, ETC.)
UNIQUE ID
LOOP ID
DUPLEX OR REDUNDANT ADDS "A" OR "B"

VALVE CODES

SYM – DEFINITION

AOV – AIR–OPERATED VALVE
BPRV – BACK PRESSURE REGULATOR VALVE
CV – CHECK VALVE
FCV – FLOW CONTROL VALVE
HV – HAND VALVE
MOV – MOTOR–OPERATED VALVE
NC – NORMALLY CLOSED
PCV – PRESSURE CONTROL VALVE
PRV – PRESSURE REGULATOR VALVE
ROV – ROTARY VALVE
RV – RELIEF VALVE
SOV – SOLENOID–OPERATED VALVE
VB – VACUUM BREAKER

VALVE SYMBOLS

TYPE — OPEN — CLOSED

BALL
GATE
GLOBE
PLUG
NEEDLE
BUTTERFLY
KNIFE GATE
PRESSURE RELIEF
CHECK
3–WAY
4–WAY
ROTARY
PRESSURE REGULATOR (INTERNAL, DOWNSTREAM)
PRESSURE REGULATOR (INTERNAL, BACKPRESSURE)

CONTROL VALVE ACTUATORS

SOLENOID (INSTRUMENT AIR) (NO ADDITIONAL VALVE)
MOTOR
PNEUMATIC, INDICATE F.O., F.C.
DIAPHRAGM
VALVE W/ I/P CONVERTER
SOLENOID VALVE
VACUUM RELIEF
2–WAY MANIFOLD
3–WAY MANIFOLD
5–WAY MANIFOLD
PRESSURE UNLOADING REGULATOR

INSTRUMENT SYMBOLS

ALARM, LOCAL, AUDIBLE
PILOT LIGHT
MAGNETIC FLOWMETER
THERMAL DIFFERENTIAL FLOWMETER
CORIOLIS FLOWMETER
VORTEX FLOWMETER
TURBINE FLOWMETER
PITOT TUBE FLOWMETER
ROTAMETER
FLAME DETECTOR
ORIFICE FLOWMETER
ULTRASONIC LEVEL

INSTRUMENTS

	FIELD MOUNT	PRIMARY LOCATION NORMALLY ACCESSIBLE TO OPERATOR	AUXILIARY LOCATION NORMALLY ACCESSIBLE TO OPERATOR	PRIMARY LOCATION NORMALLY INACCESSIBLE TO OPERATOR	AUXILIARY LOCATION NORMALLY INACCESSIBLE TO OPERATOR
DISCRETE					
SHARED DISP. SHARED CONTROL					

LINE SYMBOLS

PROCESS LINE
ELECTRICAL
FLEX HOSE
INSTRUMENT AIR
CAPILLARY
HEAT TRACED & INSULATED
INSULATED
WIRELESS SIGNAL
GUIDED WAVE
SOFTWARE OR DATA LINK (ETHERNET, ETC.)

XXXX
XXXX
XXXX

REFERENCE TO INCOMING/OUTGOING SERVICES & CONTROLS

EQUIPMENT

BLOWER
IN–LINE HEATER
MOTOR
HORIZONTAL CENTRIFUGAL PUMP
AGITATOR/MIXER
AMMONIA INJECTION GRID
STATIC MIXER
NOxOUT INJECTOR
RETRACT W/ INJECTOR
ULTRA LANCE
BASKET FILTER
DIRECT DISPLACEMENT PUMP
VERTICAL CENTRIFUGAL PUMP
SCREW CONVEYOR
ACCUMULATOR
SIMPLEX STRAINER
DUPLEX STRAINER
SONIC HORN (ACOUSTIC CLEANER)
HERT INJECTOR
FILTER
MNL LANCE
AMMONIA INJECTOR
BAYONET HEATER
WATER COOLED INJECTOR
DUST SUPRESSION CYCLONE
PROBE

PIPING SPECIALTIES

DIAPHRAM ISOLATOR
WYE STRAINER
LPA — LARGE PARTICLE ASH SCREEN
EXPANSION JOINT
REDUCER
QUICK CONNECT FITTING–FEMALE
QUICK CONNECT FITTING–MALE
CAP END ENCLOSURE
FLANGED CONNECTION
UNION
UNION COMPRESSION
SIPHON
PULSATION DAMPENER

MISC. SYMBOLS

FTI SCOPE BOUNDARY
OTHERS — FTI — SCOPE BREAK I.D.
P — T — * PIPE AND TUBING INTERFACE

* NOTE:
TYPICAL USE OF TUBING (TO INSTRUMENTS)TO BE NOTED ON P&ID IN LIEU OF LINE CLASS INDICATION FOR MINOR INSTRUMENT/ IMPULSE LINE RUNS.

TP 1 — CLIENT TIE IN POINT DETAILS

PIPE LINE CLASS

XX – XXX – XXX

LINE CLASS
SERVICE (SYSTEM)
SIZE (PIPE OR TUBE)

LINE CLASS:

SS1 SCH. 10S, GR. 304L, WITH 150# CLASS FITTINGS
SS2 SCH. 40S, GR. 304L, WITH 150# CLASS FITTINGS
SS3 SCH. 40S, GR. 304L, WITH 300# CLASS FITTINGS
SS4 SCH. 40S, GR. 316L, WITH 150# CLASS FITTINGS
SS5 SCH. 40S, GR. 316L, WITH 300# CLASS FITTINGS

CS1 SCH. 40, CARBON STEEL, 150# CLASS FITTINGS
CS2 SCH. 80, CARBON STEEL, 150# CLASS FITTINGS
CS3 SCH. 40, CARBON STEEL, 300# CLASS FITTINGS
CS4 SCH. 80, CARBON STEEL, 300# CLASS FITTINGS

TB1 TUBING, 316L, 0.9mm (0.035") WALL THICKNESS
TB2 TUBING, 316L, 1.2mm (0.049") WALL THICKNESS
TB3 TUBING, POLYURETHANE, 0.063" WALL THICKNESS

FRP1 SCH. 40 FRP PIPE
DUCT DUCTWORK CONFORMING TO + XX/– XX PRESSURE RATING
CPVC SCH. 80 CPVC
PVC SCH. 80 PVC

NO.	DATE	REVISIONS	DRAWN BY	CHECKED BY
0	03/16/23	ISSUED FOR FABRICATION	MEH	JM

FUEL TECH
Technologies to enable clean efficient energy
FUEL TECH, INC. 27601 BELLA VISTA PKWY, WARRENVILLE, IL 60555

UC DAVIS MEDICAL CENTER

LEGEND AND GENERAL NOTES

APPROVED BY: K. KRAUSE
CHECKED BY: A. TOPACIO
DRAWN BY: M. HARTMAN
DATE: 6/20/2022
SCALE: NONE
SIZE: D
DRAWING NO. 1294P–M02–01–R0

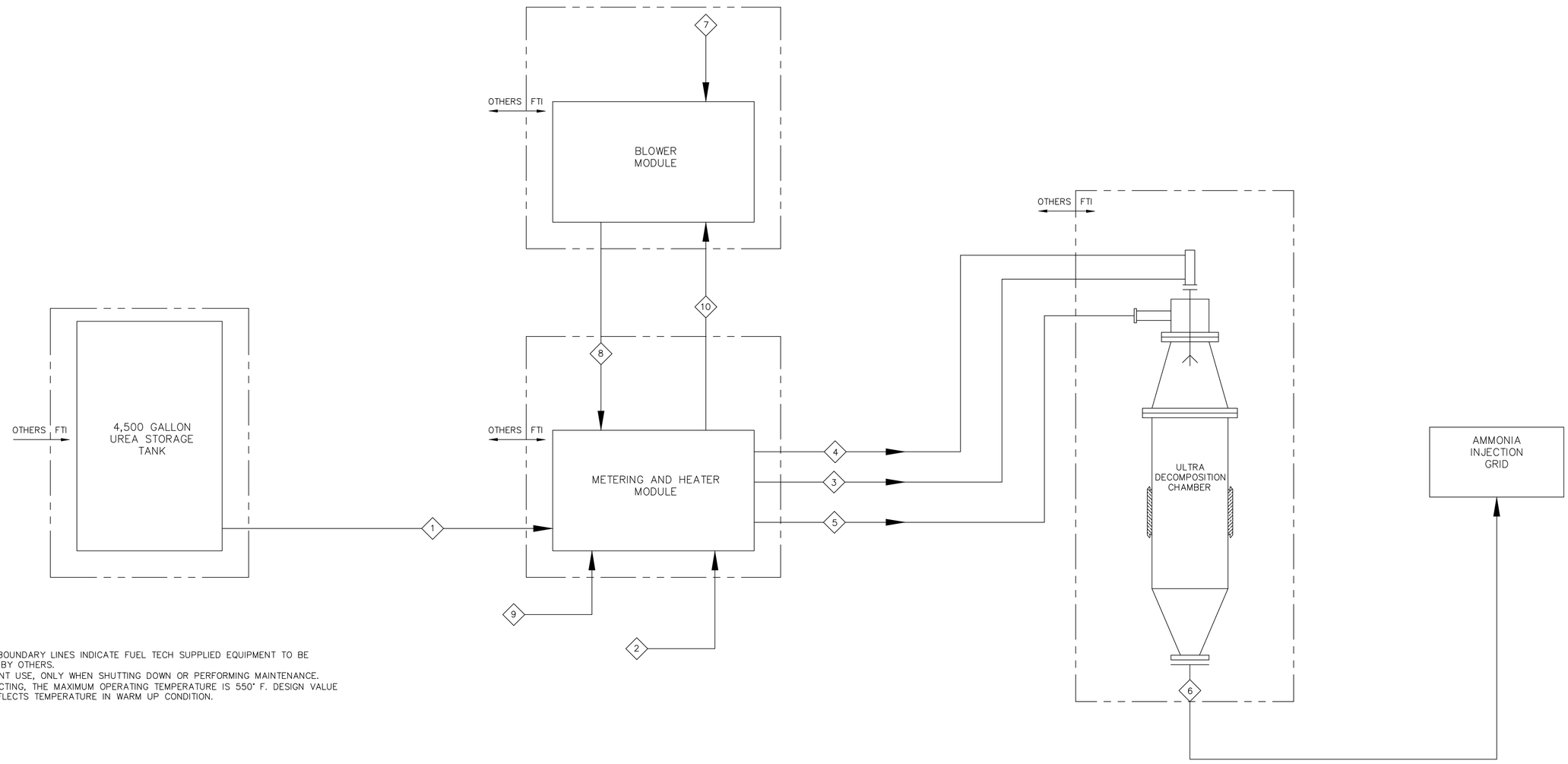

NOTES

1) PHANTOM BOUNDARY LINES INDICATE FUEL TECH SUPPLIED EQUIPMENT TO BE INSTALLED BY OTHERS.
2) INTERMITTENT USE, ONLY WHEN SHUTTING DOWN OR PERFORMING MAINTENANCE.
3) WHILE INJECTING, THE MAXIMUM OPERATING TEMPERATURE IS 550° F. DESIGN VALUE SHOWN REFLECTS TEMPERATURE IN WARM UP CONDITION.

Line number		1	2	3	4	5	6	7	8	9	10
Service		Urea Solution to Metering	Insrument Air Supply to Metering Module	Atomizing Air Supply to Injector	Chemical Supply to Injector	Heated Air Supply to Decomposition Chamber	NH3/Air Mixture to AIG	Ambient Air Supply to Blower Module	Air Supply from Blower Module to Metering and Heater Module	Flush Water	Instrument Air Supply to Blower Valves
Line size	inches	1.0	0.5	0.50	0.25	6.0	6.0	N/A	4.0	0.50	0.375
Schedule	#	40	40	0.049"	0.035"	10	10	N/A	10	40	0.063"
Material		304SS	304SS	316SS	316SS	304SS	304SS	N/A	304SS	304SS	Poly
Design Pressure	psig	10	100	100	100	37 IN WC	37 IN WC	Ambient	37 IN WC	75	100
Operating Pressure (norm.)	psig	3	80	50	10	22 IN WC	17 IN WC	Ambient	29 IN WC	5-50	80
Design temperature	F	40-120	40-120	40-120	40-120	925	925	90	90	100	40-120
Operating temperature (norm.)	F	60	70	70	60	850	550	40 - 90	40 - 90	70	70
Design Flow	gph (scfm)	11.6	(17)	(15)	11.6	(390)	(453)	(390)	(390)	11.6	(1)
Flow (norm.)	gph (scfm)	2 - 11.6	(17)	(15)	2 - 11.6	(390)	(415-455)	(390)	(390)	8.0	(0)
Notes							3			2	2

NO.	DATE	REVISIONS	DRAWN BY	CHECKED BY
0	03/16/23	ISSUED FOR FABRICATION	MEH	JM

FUEL TECH
Technologies to enable clean efficient energy™
FUEL TECH, INC. 27601 BELLA VISTA PKWY, WARRENVILLE, IL 60555

UC DAVIS MEDICAL CENTER

ULTRA SYSTEM
PROCESS FLOW DIAGRAM

APPROVED BY: K. KRAUSE
CHECKED BY: A. TOPACIO
DRAWN BY: M. HARTMAN
DATE: 7/22/2022
SCALE: NONE
SIZE: D
DRAWING NO. 1294P–M01–01–R0

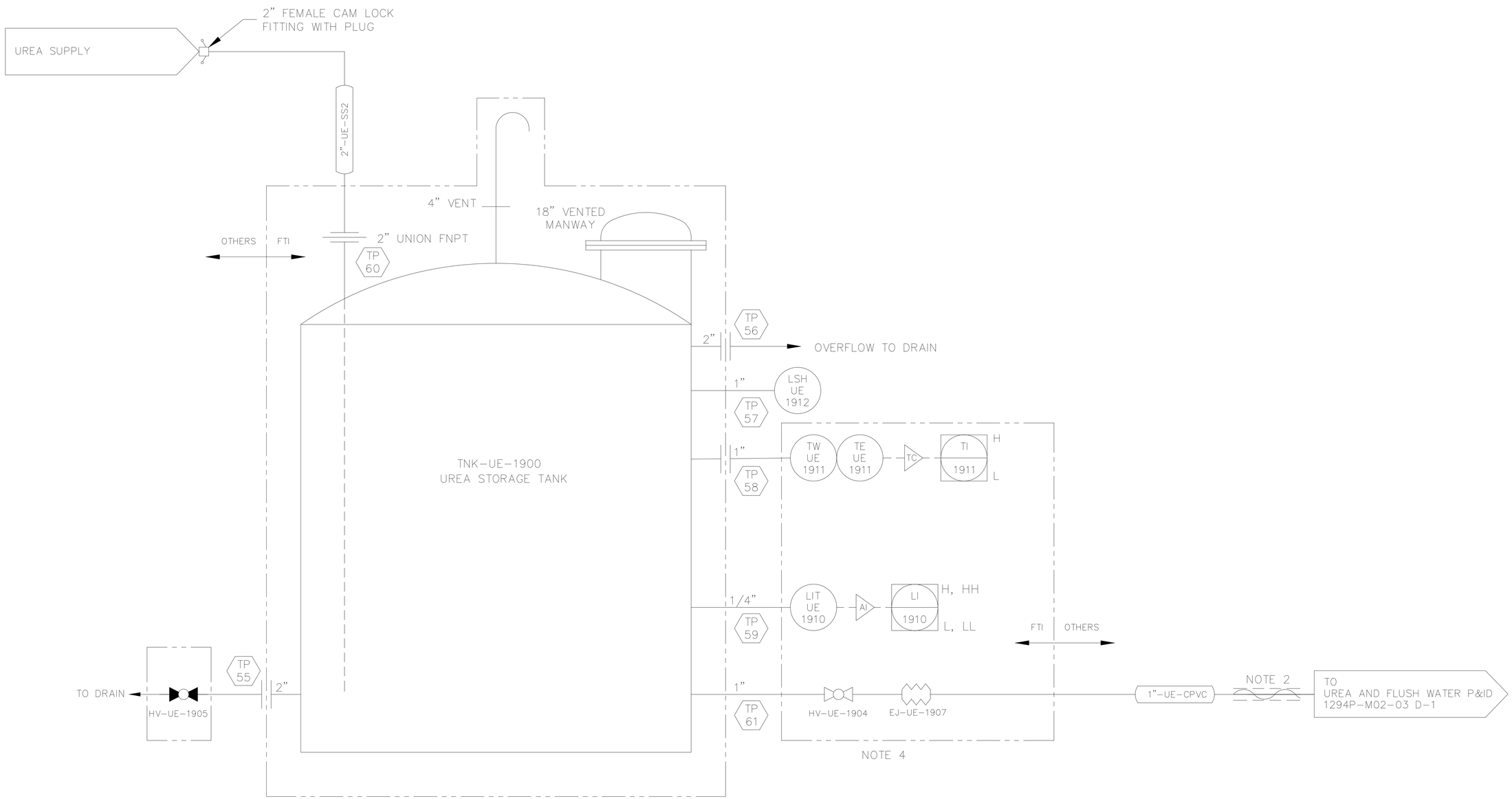

NOTES:

1. UREA REAGENT MUST BE KEPT ABOVE 20°F IF USING 32% DEF AND ABOVE 40°F IF USING 40% DEF.
2. HEAT-TRACE & INSULATE BY OTHERS IF REQUIRED.
3. ALL VALVES, EQUIPMENT, AND INSTRUMENTS ON THIS DRAWING ARE PROVIDED BY FUEL TECH AND SHIPPED LOOSE. OTHERS TO PROVIDE PIPE, TUBE, FITTINGS, GASKETS, FLANGE FASTENERS, INSTALLATIONS AND WIRING SUPPORTS.
4. EQUIPMENT LOCATED WITHIN PHANTOM BOUNDARY LINES INDICATES FUEL TECH SUPPLIED EQUIPMENT TO BE INSTALLED BY OTHERS.
5. NO FORCES ARE ALLOWED ON TIE-IN FLANGES. CUSTOMER MUST PROVIDE ADEQUATE PIPE SUPPORTS AT ALL TIE-IN LOCATIONS PRIOR TO CONNECTING WITH FTI MODULES.
6. UREA FILL INTERNAL PIPE PROVIDED BY TANK SUPPLIER, MANUFACTURER'S STANDARD (SHIPPED LOOSE).
7. UREA CONCENTRATION MUST BE 32.5% OR 40%.

NO.	DATE	REVISIONS	DRAWN BY	CHECKED BY
0	03/16/23	ISSUED FOR FABRICATION	MEH	JM

FUEL TECH
Technologies to enable clean efficient energy
FUEL TECH, INC. 27601 BELLA VISTA PKWY, WARRENVILLE, IL 60555

UC DAVIS MEDICAL CENTER

ULTRA SYSTEM
UREA STORAGE TANK P&ID

APPROVED BY: K. KRAUSE
CHECKED BY: A. TOPACIO
DRAWN BY: M. HARTMAN
DATE: 6/28/2022
SCALE: NONE
SIZE: D
DRAWING NO.
1294P-M02-02-R0

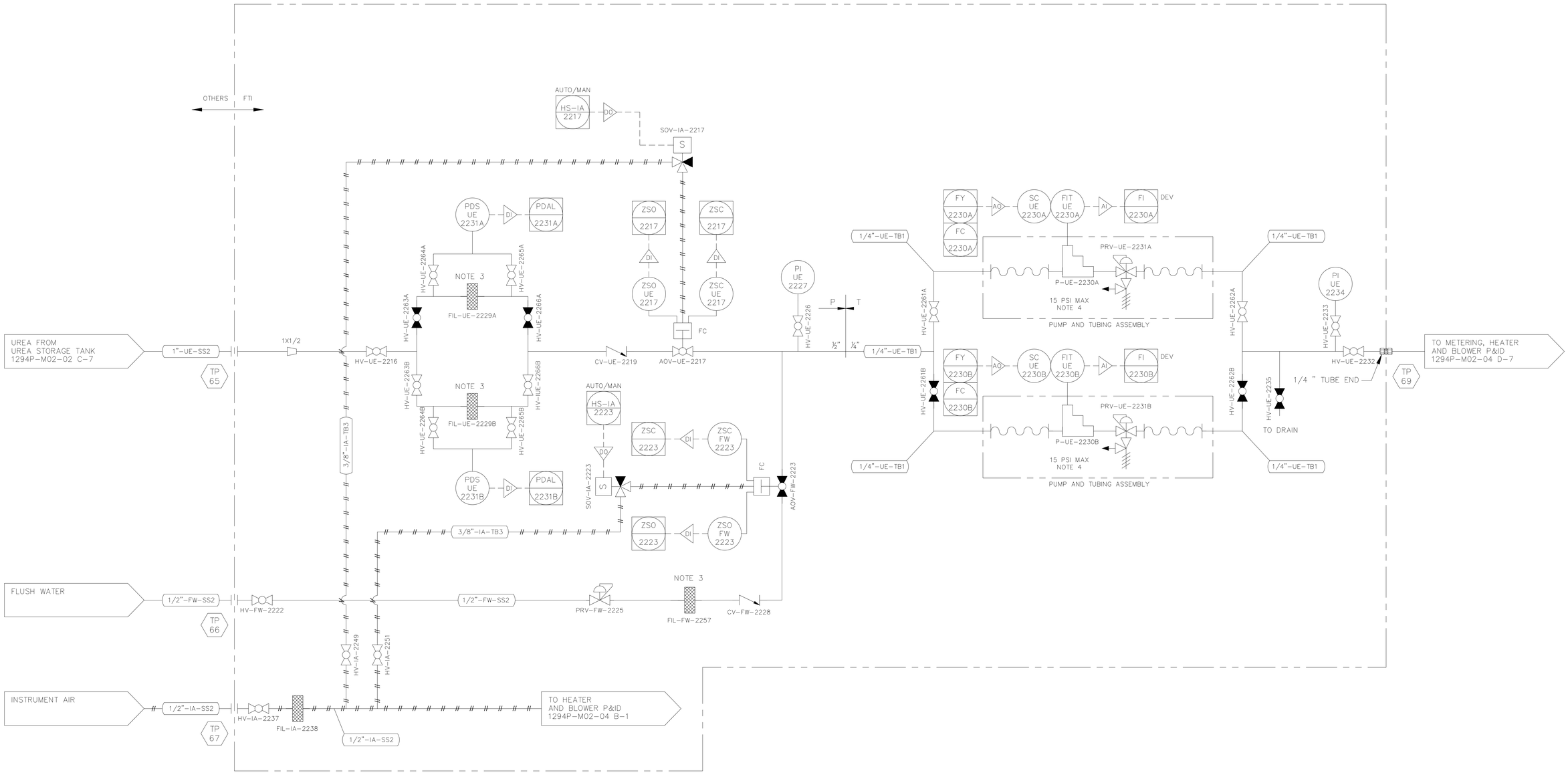

NOTES:

1. N/A.
2. N/A.
3. LIQUID FILTERS TO PROVIDE A FILTRATION RATING OF 5 MICRONS.
4. PUMP ASSEMBLY INCLUDES CHECK AND PRESSURE REGULATOR ON DOWNSTREAM DISCHARGE AS WELL AS A BYPASS LINE FOR PUMP PROTECTION. PUMP ASSEMBLY INLET AND OUTLET CONNECTIONS ARE MADE WITH A SHORT PIECE OF POLY TUBING. SEE GA DRAWING FOR ADDITIONAL DETAILS.
5. N/A.
6. NO FORCES ARE ALLOWED ON TIE-IN FLANGES. CUSTOMER MUST PROVIDED ADEQUATE PIPE SUPPORTS AT ALL TIE-IN LOCATIONS PRIOR TO CONNECTING WITH FTI MODULES.
7. N/A.

NO.	DATE	REVISIONS	DRAWN BY	CHECKED BY
0	03/16/23	ISSUED FOR FABRICATION	MEH	JM

FUEL TECH
Technologies to enable clean efficient energy
FUEL TECH, INC. 27601 BELLA VISTA PKWY, WARRENVILLE, IL 60555

UC DAVIS MEDICAL CENTER

ULTRA SYSTEM
UREA AND FLUSH WATER P&ID

APPROVED BY: K. KRAUSE
CHECKED BY: A. TOPACIO
DRAWN BY: M. HARTMAN
DATE: 6/28/2022
SCALE: NONE
SIZE: D
DRAWING NO. 1294P-M02-03-R0

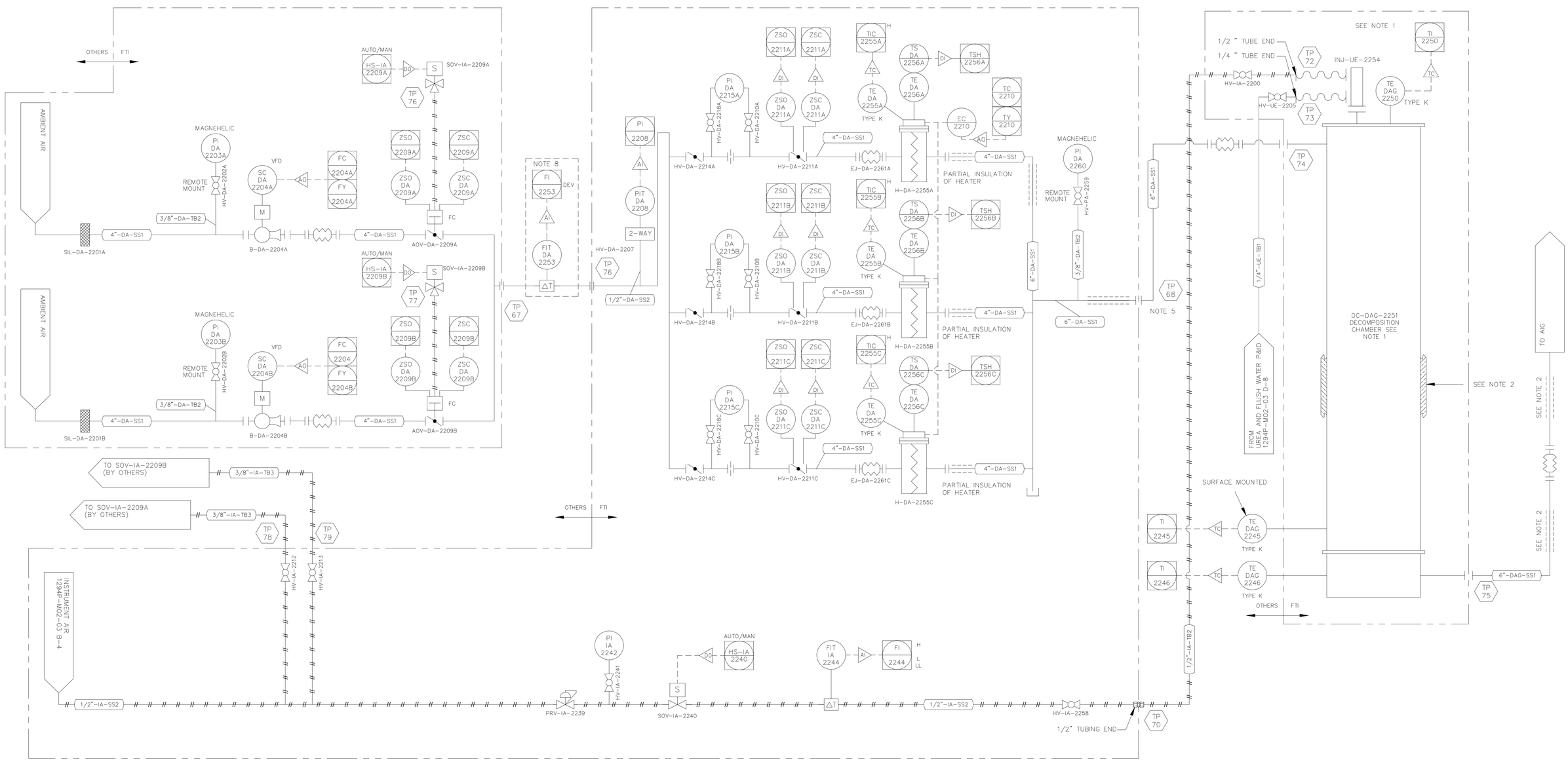

NOTES:

1. EQUIPMENT SUPPLIED BY FUEL TECH AND INSTALLED BY OTHERS.
2. ALL INSULATION IS PROVIDED AND INSTALLED BY OTHERS. CONSULT FUEL TECH INC. FOR TEMPERATURE TO MAINTAIN WHEN DESIGNING INSULATION TYPE AND THICKNESS.
3. N/A.
4. N/A.
5. SYSTEM DESIGNED FOR MAXIMUM OF 50' BETWEEN THE MODULE AND THE DECOMPOSITION CHAMBER. LARGER RUNS TO BE EVALUATED BY ENGINEERING.
6. NO FORCES ARE ALLOWED ON TIE-IN FLANGES. CUSTOMER MUST PROVIDED ADEQUATE PIPE SUPPORTS AT ALL TIE-IN LOCATIONS PRIOR TO CONNECTING WITH FTI MODULES.
7. TE-DA-2255 A/B/C AND TE-DA-2256A/B/C ARE INTEGRAL TO THE HEATERS. NO PHYSICAL TAGS WILL APPEAR FOR THESE DEVICES.
8. FIT-DA-2253 IS SHIPPED LOOSE. IT IS INSTALLED IN THE FIELD. UPSTREAM AND DOWNSTREAM DIAMETER SHALL BE IN ACCORDANCE TO MANUFACTURERS REQUIREMENTS.

NO.	DATE	REVISIONS	DRAWN BY	CHECKED BY
1	03/16/23	ISSUED FOR FABRICATION	MH	AT
0	03/01/23	INITIAL ISSUE	MH	SC

FUEL TECH
Technologies to enable clean efficient energy
FUEL TECH, INC. 27601 BELLA VISTA PKWY, WARRENVILLE, IL 60555

UC DAVIS MEDICAL CENTER

ULTRA SYSTEM
HEATER MODULE AND BLOWER MODULE P&ID

APPROVED BY: K. KRAUSE
CHECKED BY: A. TOPACIO
DRAWN BY: M. HARTMAN
DATE: 3/01/2023
SCALE: NONE
SIZE: D
DRAWING NO. 1294P-M02-04-R1

PARTS LIST

ITEM	TAG	DESCRIPTION
1	PDS-UE-2231B	DIFFERENTIAL PRESSURE SWITCH 1/4" FNPT HIGH/LOW
2	PDS-UE-2231A	DIFFERENTIAL PRESSURE SWITCH 1/4" FNPT HIGH/LOW
3	EJ-DA-2261A	EXPANSION JOINT 4"
4	EJ-DA-2261B	EXPANSION JOINT 4"
5	EJ-DA-2261C	EXPANSION JOINT 4"
6	FIL-UE-2229B	FILTER 1/2"
7	FIL-FW-2257	FILTER 1/2"
8	FIL-UE-2229A	FILTER 1/2"
9	FIL-IA-2238	FILTER 1/2"
10	FIT-IA-2244	FLOW METER 1/2"
11	H-DA-2255C	HEATER 4" X 4"
12	H-DA-2255A	HEATER 4" X 4"
13	H-DA-2255B	HEATER 4" X 4"
14		HEATER PANEL 60" x 58" x 18"
15	OR-DA-2224C	ORIFICE PLATE 4" X 2 1/2" BORE
16	OR-DA-2224A	ORIFICE PLATE 4" X 2 1/2" BORE
17	OR-DA-2224B	ORIFICE PLATE 4" X 2 1/2" BORE
18		PLC PANEL 60" x 36" x 16"
19	PI-UE-2234	PRESSURE GAUGE 1/2"
20	PI-UE-2227	PRESSURE GAUGE 1/2"
21	PI-IA-2242	PRESSURE GAUGE 1/2"
22	PI-DA-2215A	PRESSURE GAUGE 1/8" MAGNEHELIC
23	PI-DA-2260	PRESSURE GAUGE 1/8" MAGNEHELIC
24	PI-DA-2215C	PRESSURE GAUGE 1/8" MAGNEHELIC
25	PI-DA-2215B	PRESSURE GAUGE 1/8" MAGNEHELIC
26	PIT-DA-2208	PRESSURE TRANSMITTER
27	P-UE-2230B	PUMP 1/4" DOSING
28	P-UE-2230A	PUMP 1/4" DOSING
29	HV-DA-2207	VALVE 2 WAY 1/2"
30	AOV-FW-2223	VALVE AOV 1/2"
31	AOV-UE-2217	VALVE AOV 1/2"
32	HV-UE-2216	VALVE BALL 1/2"
33	HV-FW-2222	VALVE BALL 1/2"
34	HV-UE-2266A	VALVE BALL 1/2"
35	HV-UE-2263A	VALVE BALL 1/2"
36	HV-UE-2266B	VALVE BALL 1/2"
37	HV-UE-2263B	VALVE BALL 1/2"
38	HV-IA-2237	VALVE BALL 1/2"
39	HV-UE-2226	VALVE BALL 1/2"
40	HV-IA-2241	VALVE BALL 1/2"
41	HV-IA-2258	VALVE BALL 1/2"
42	HV-UE-2232	VALVE BALL 1/4" COMP
43	HV-UE-2262A	VALVE BALL 1/4" COMP
44	HV-UE-2262B	VALVE BALL 1/4" COMP
45	HV-UE-2261A	VALVE BALL 1/4" COMP
46	HV-UE-2235	VALVE BALL 1/4" COMP
47	HV-UE-2233	VALVE BALL 1/4" COMP
48	HV-UE-2261B	VALVE BALL 1/4" COMP
49	HV-UE-2265A	VALVE BALL 3/8" COMP
50	HV-UE-2264A	VALVE BALL 3/8" COMP
51	HV-DA-2218A	VALVE BALL 3/8" COMP
52	HV-DA-2218C	VALVE BALL 3/8" COMP
53	HV-DA-2218B	VALVE BALL 3/8" COMP
54	HV-DA-2210B	VALVE BALL 3/8" COMP
55	HV-DA-2210C	VALVE BALL 3/8" COMP
56	HV-IA-22451	VALVE BALL 3/8" COMP
57	HV-IA-2249	VALVE BALL 3/8" COMP
58	HV-DA-2210A	VALVE BALL 3/8" COMP
59	HV-UE-2264B	VALVE BALL 3/8" COMP
60	HV-UE-2265B	VALVE BALL 3/8" COMP
61	HV-PA-2259	VALVE BALL 3/8" COMP
62	HV-DA-2211B	VALVE BUTTERFLY 4"
63	HV-DA-2211A	VALVE BUTTERFLY 4"
64	HV-DA-2214B	VALVE BUTTERFLY 4"
65	HV-DA-2214A	VALVE BUTTERFLY 4"
66	HV-DA-2214C	VALVE BUTTERFLY 4"
67	HV-DA-2211C	VALVE BUTTERFLY 4"
68	CV-UE-2219	VALVE CHECK 1/2"
69	CV-FW-2228	VALVE CHECK 1/2"
70	PRV-IA-2239	VALVE PRV 1/2"
71	SOV-IA-2240	VALVE SOLENOID 1/2"

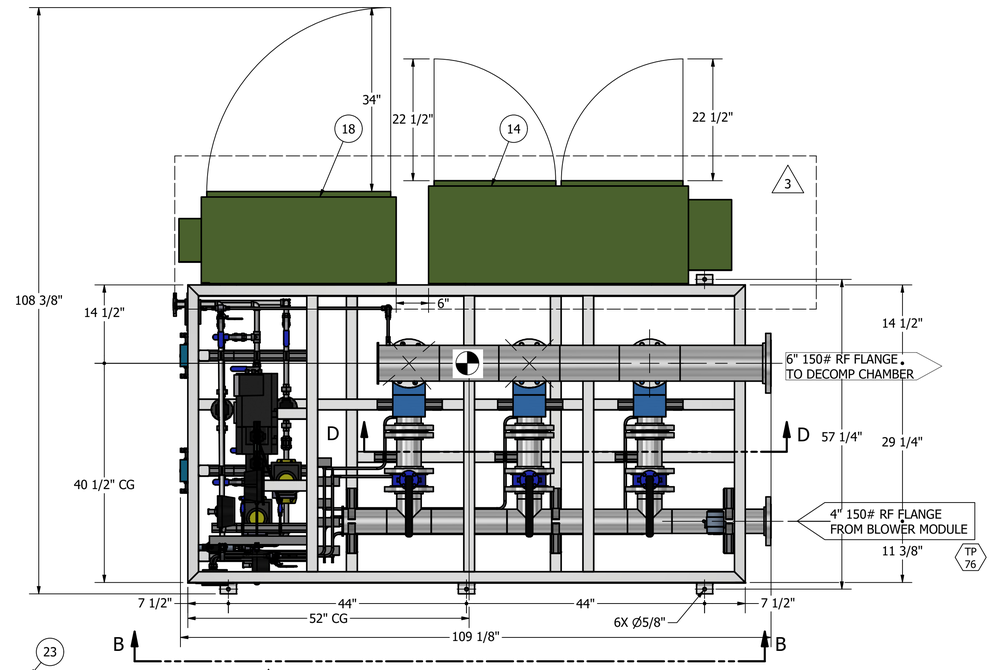

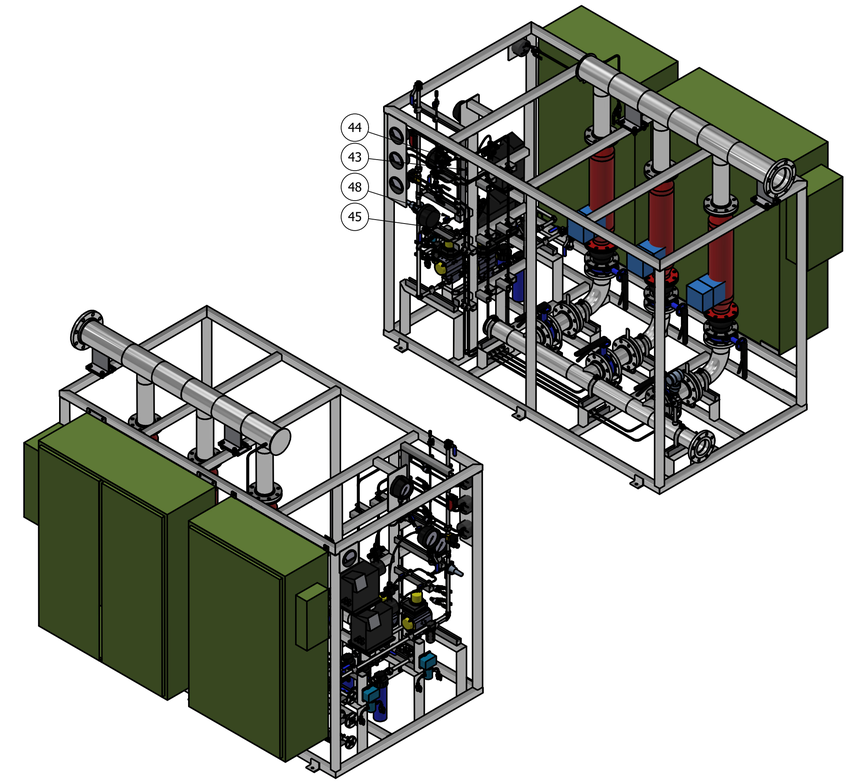

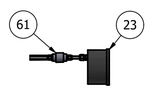

SECTION C-C

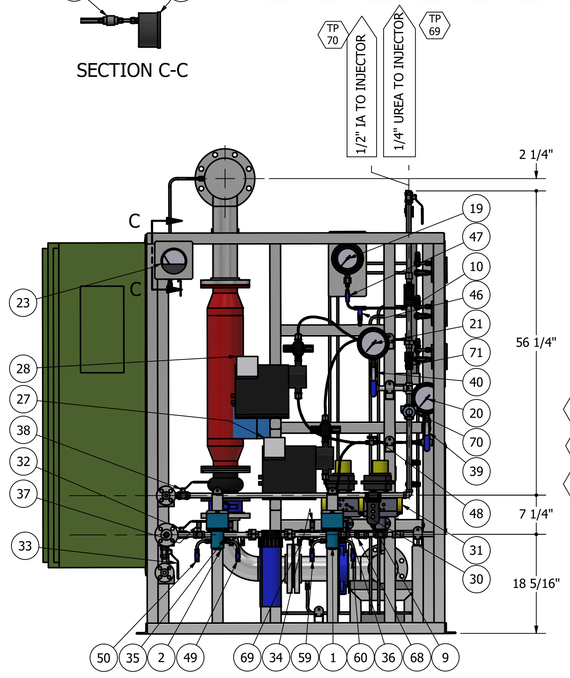

VIEW A-A
LEFT

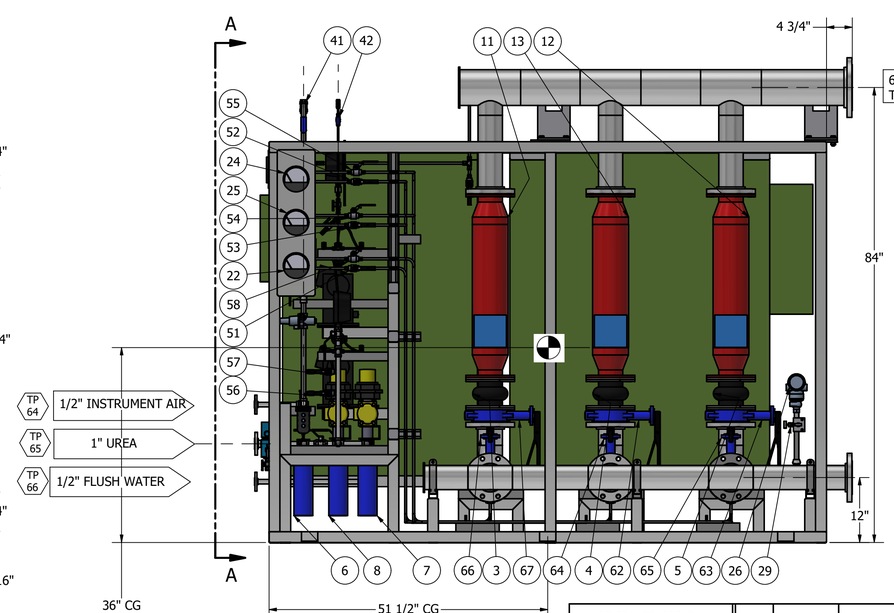

VIEW B-B
FRONT

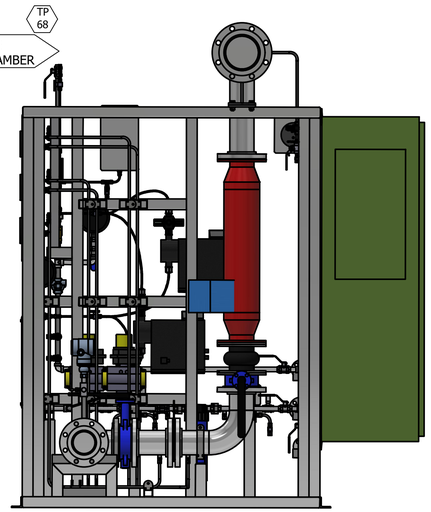

RIGHT

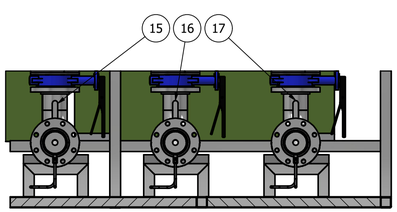

SECTION D-D

ESTIMATED WEIGHT IS 2,700#

NOTE: NO FORCES ARE ALLOWED ON TIE-IN FLANGES. CUSTOMER MUST PRIVIDE ADEQUATE PIPE SUPPORTS AT ALL TIE-IN LOCATIONS PRIOR TO CONNECTING WITH FUEL TECH PIPING MODULES.

TOLERANCE LEGEND (UNLESS NOTED)	NO.	DATE	REVISIONS	DRAWN BY	CHECKED BY
.XX = ± .03"					
.XXX = ± .010"	3	1/12/23	ISSUE FOR FABRICATION	DG	AT
FRACTIONS = ± 1/8"	2	11/17/22	CLIENT COMMENTS/TIE POINTS	DG	AT
ANGLES = ± 3°	1	9/22/22	CLIENT COMMENTS/TIE POINTS	DG	AT
CUSTOMER TIE - INS = ± 1/4"					

FUEL TECH™
Technologies to enable clean efficient energy
FUEL TECH, INC. 27601 BELLA VISTA PKWY, WARRENVILLE, IL 60555

UC DAVIS MEDICAL CENTER

ULTRA SYSTEM
METERING AND HEATER MODULE

APPROVED BY: K. KRAUSE
CHECKED BY: A. TOPACIO
DRAWN BY: D. GHILARDI
DATE: 7/29/22
SCALE: NONE SIZE: D
DRAWING NO. 1294P-M03-01-GA-R3

PARTS LIST		
ITEM	TAG	DESCRIPTION
1	B-DA-2204A	BLOWER 4"
2	B-DA-2204B	BLOWER 4"
3		EXPANSION JOINT 4"
4		EXPANSION JOINT 4"
5	PI-DA-2203B	PRESSURE GAUGE 1/8" MAGNEHELIC
6	PI-DA-2203A	PRESSURE GAUGE 1/8" MAGNEHELIC
7	SIL-DA-2201B	SILENCER
8	SIL-DA-2201A	SILENCER
9		SUPPORT FRAME 1294P-M03-02-FRM
10	AOV-DA-2209A	VALVE AUTOMATIC ON/OFF 4"
11	AOV-DA-2209B	VALVE AUTOMATIC ON/OFF 4"
12	HV-DA-2202B	VALVE BALL 3/8" COMP
13	HV-DA-2202A	VALVE BALL 3/8" COMP

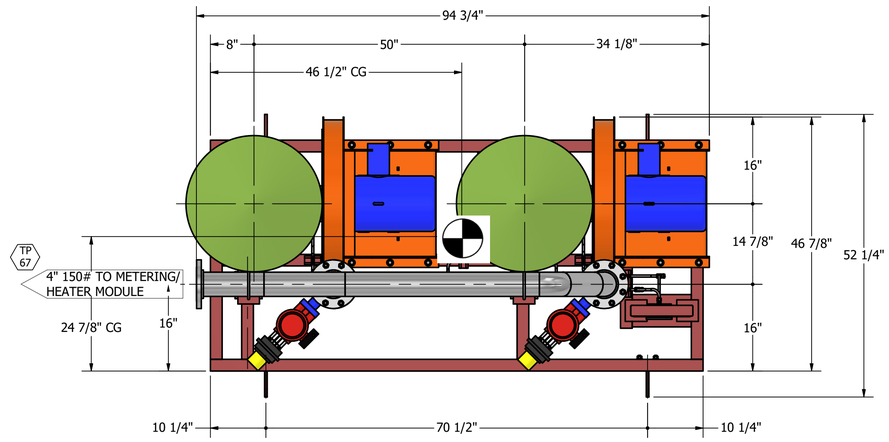

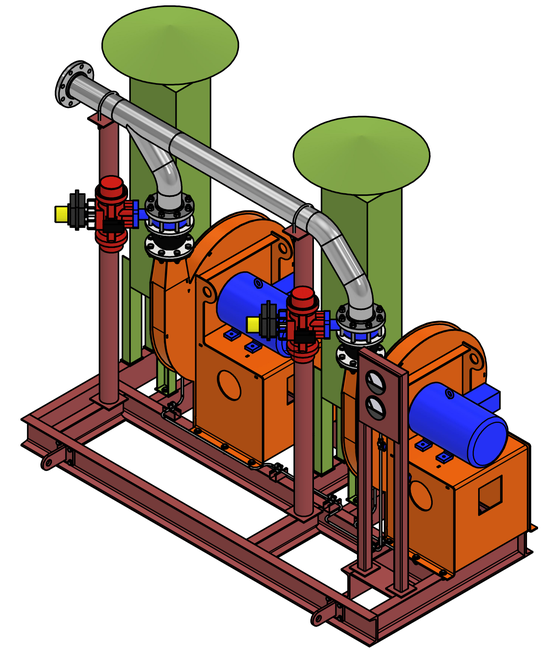

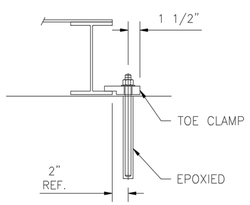

TYPICAL ANCHORAGE EXAMPLE

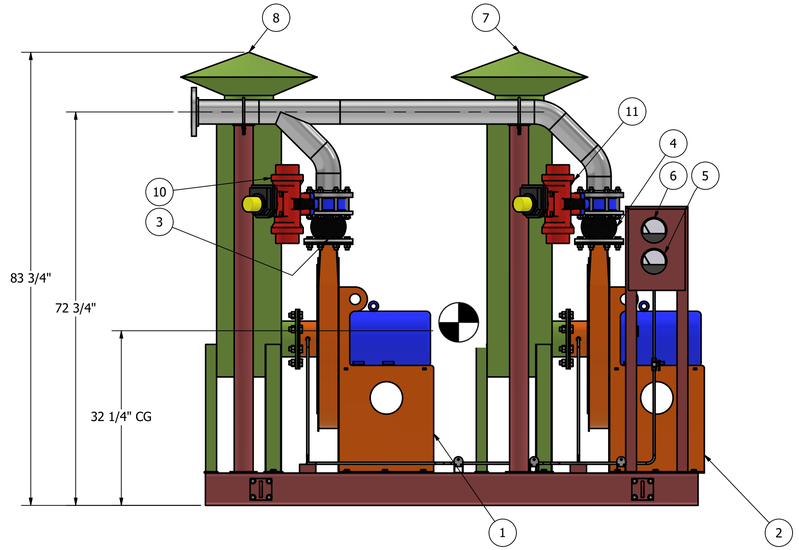

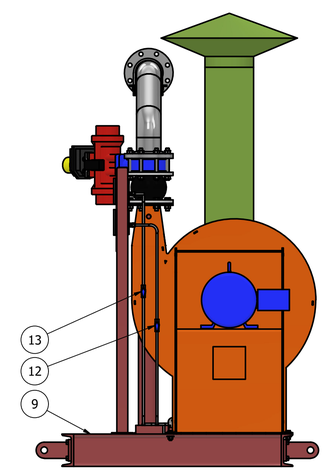

FULL ASSEMBLY WEIGHT IS 2,300 LBS
BLOWER W/MOTOR WEIGHT IS 428 LBS EACH
MOTOR WEIGHT IS 165 LBS EACH
SILENCER WEIGHT IS 175 LBS EACH

PRIME SUPPORT FRAME WITH ONE COAT OF RUST INHIBITING PRIMER AND APPLY ONE TOP COAT OF GRAY EXTERIOR ENAMEL.

TOLERANCE LEGEND (UNLESS NOTED)	NO.	DATE	REVISIONS	DRAWN BY	CHECKED BY
.XX = ± .03"					
.XXX = ± .010"	3	1/19/23	ISSUE FOR FABRICATION	DG	AT
FRACTIONS = ± 1/8"	2	10/10/22	ADDED CENTER OF GRAVITY	DG	AT
ANGLES = ± 3°	1	9/26/22	CLIENT COMMENTS	DG	AT
CUSTOMER TIE - INS = ± 1/4"					

FUEL TECH™ Technologies to enable clean efficient energy
FUEL TECH, INC. 27601 BELLA VISTA PKWY, WARRENVILLE, IL 60555

UC DAVIS MEDICAL CENTER

ULTRA SYSTEM BLOWER MODULE

APPROVED BY: K. KRAUSE
CHECKED BY: A. TOPACIO
DRAWN BY: D. GHILARDI
DATE: 8/12/22
SCALE: NONE SIZE: D
DRAWING NO. 1294P-M03-02-GA-R3

PARTS LIST			
ITEM	ITEM QTY	TAG	DESCRIPTION
1	1	DC-DAG-2251	DECOMPOSITION CHAMBER
2	1		FLEX HOSE - AIR
3	1		FLEX HOSE - UREA
4	1		GASKET 1 1/2" 150# KLINGER C-4401
5	4		HEX NUT 1/2" 18-8SS
6	4		HHCS 1/2" X 2 1/4" 18-8SS
7	1	INJ-UE-2254	INJECTOR
8	1	TE-DAG-2246	THERMOCOUPLE 1/2" FNPT
9	1	TE-DAG-2245	THERMOCOUPLE 1/2" FNPT
10	1	TE-DAG-2250	THERMOCOUPLE 1/2" MNPT

SHIP ITEMS LOOSE

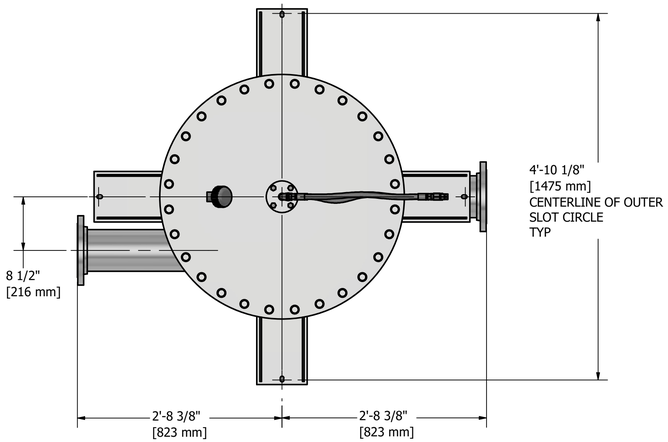

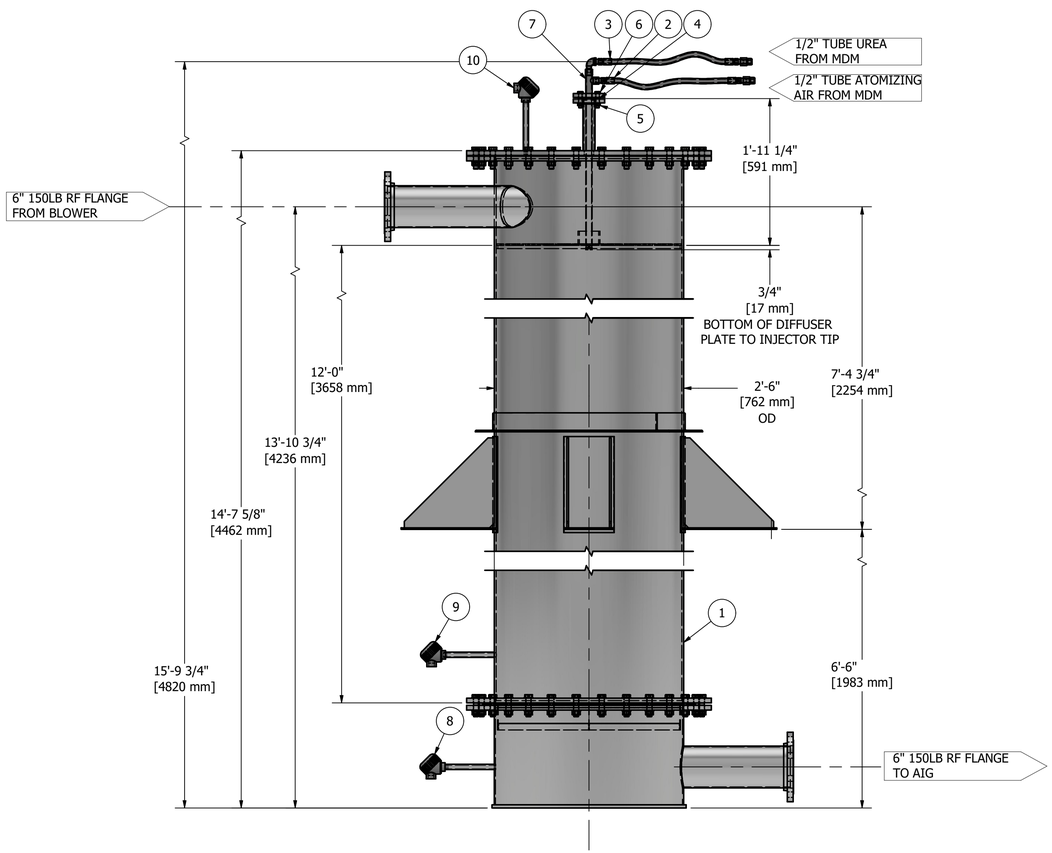

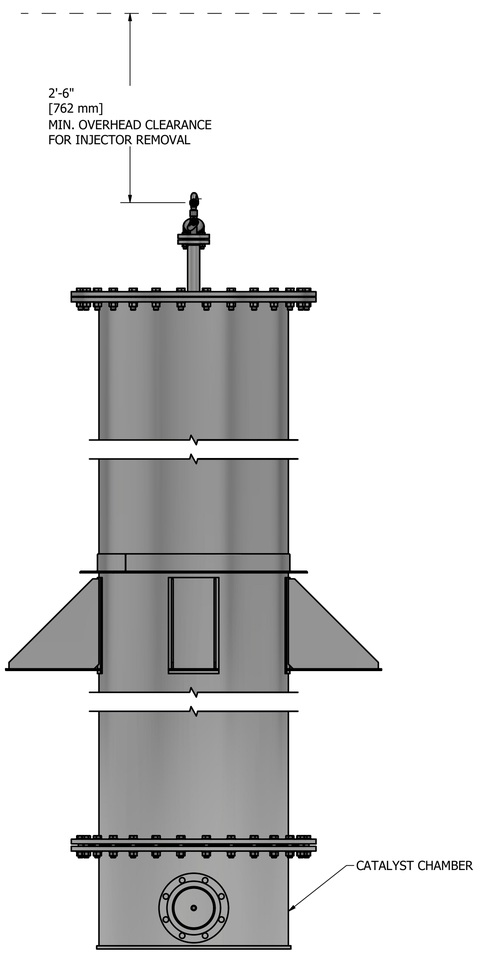

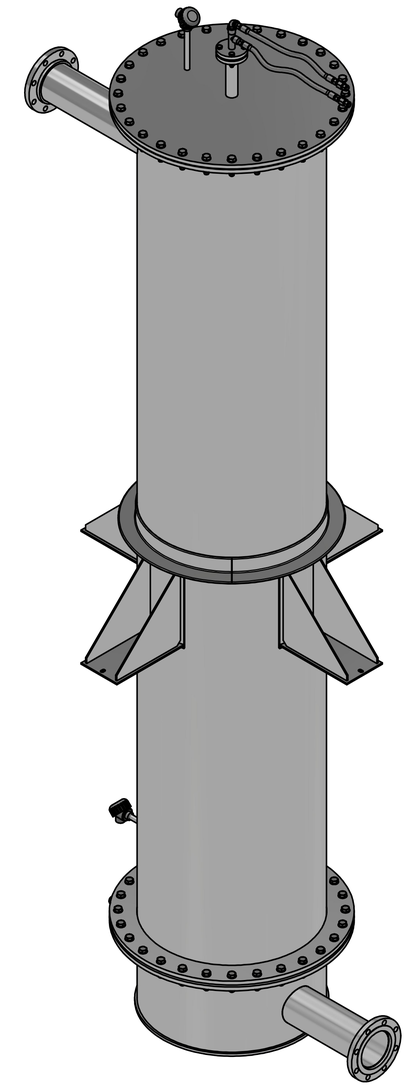

NOTES:
1. ESTIMATED WEIGHT 2000 LBS [907 KGS].

TOLERANCE LEGEND (UNLESS NOTED)					
.XX = ± .03"					
.XXX = ± .010"					
FRACTIONS = ± 1/8"					
ANGLES = ± 3°	0	8/9/23	ISSUE FOR FABRICATION	DG	AT
CUSTOMER TIE - INS = ± 1/4"	NO.	DATE	REVISIONS	DRAWN BY	CHECKED BY

FUEL TECH™
Technologies to enable clean efficient energy
FUEL TECH, INC. 27601 BELLA VISTA PKWY, WARRENVILLE, IL 60555

UC DAVIS MEDICAL CENTER

ULTRA SYSTEM
DECOMPOSITION CHAMBER ASSEMBLY
GENERAL ARRANGEMENT

APPROVED BY: K. KRAUSE
CHECKED BY: A. TOPACIO
DRAWN BY: D. GHILARDI
DATE: 8/9/22
SCALE: NONE SIZE: D
DRAWING NO. 1294P-M04-01-GA-R0

PARTS LIST		
ITEM	ITEM QTY	DESCRIPTION
1	1	DECOMPOSITION CHAMBER ASSEMBLY
2	4	HEX NUT 1/2" 18-8SS
3	4	HEX NUT JAM 1/2" 18-8SS
4	4	HHCS 1/2" X 1 3/4" 18-8SS
5	1	SUPPORT STRUCTURE
6	8	WASHER FLAT 1/2" 18-8SS

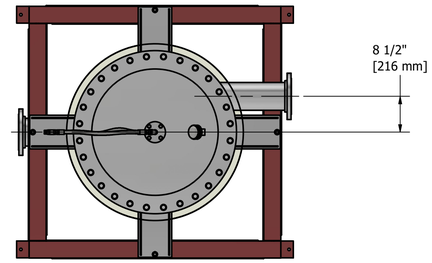

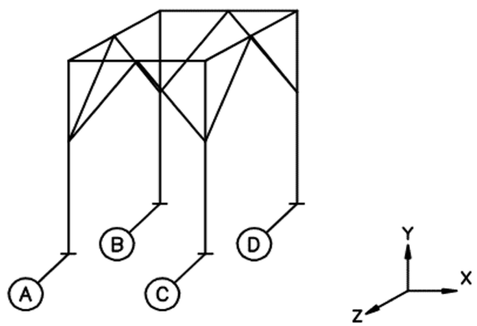

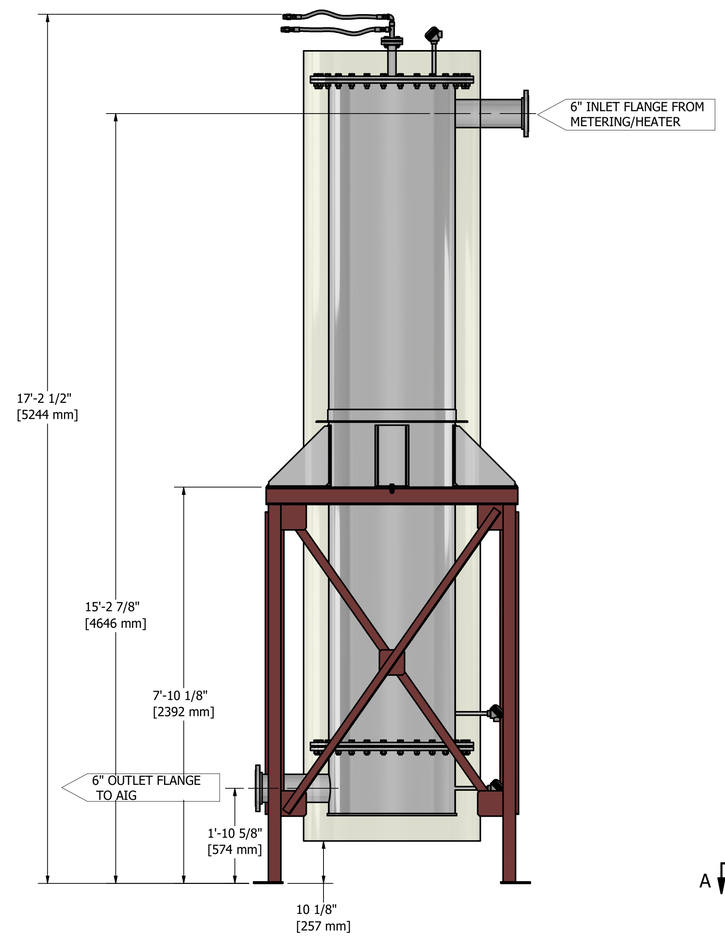

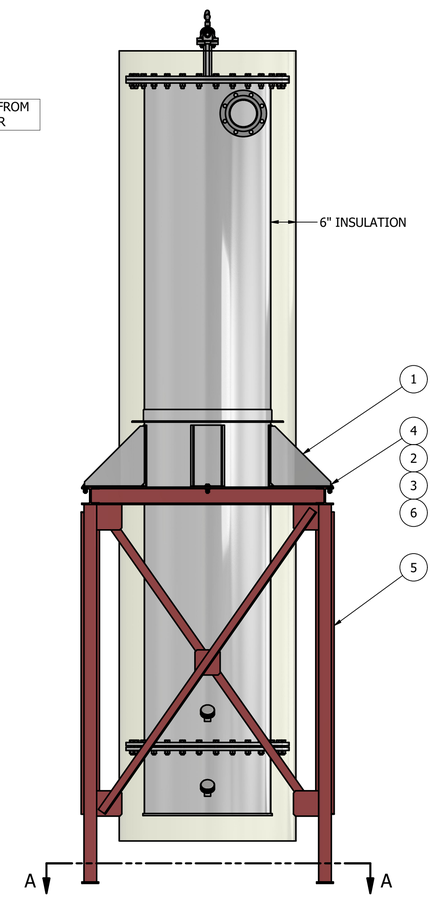

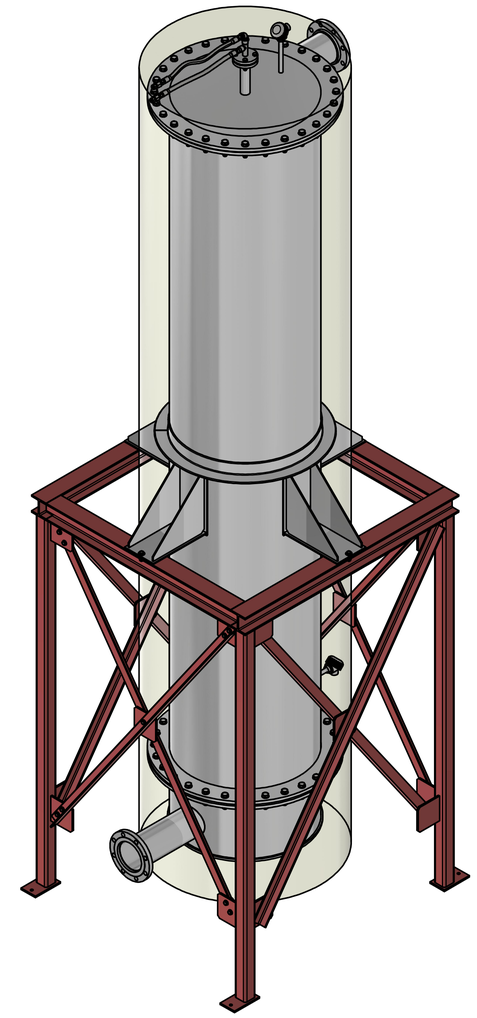

Load Table

	Axis	Dead Load (kips)	Seismic +/- Vert. (kips)	Seismic +/- X (kips)	Seismic +/- Z (kps)
A	X	0.01	0.00	0.16	0.16
	Y	-0.77	0.08	0.77	0.59
	Z	0.01	0.00	0.00	0.16
B	X	0.01	0.00	0.16	0.16
	Y	-0.77	0.08	0.77	0.59
	Z	-0.01	0.00	0.00	0.16
C	X	-0.01	0.00	0.16	0.16
	Y	-0.77	0.08	0.77	0.59
	Z	0.01	0.00	0.00	0.16
D	X	-0.01	0.00	0.16	0.16
	Y	-0.77	0.08	0.77	0.59
	Z	-0.01	0.00	0.00	0.16

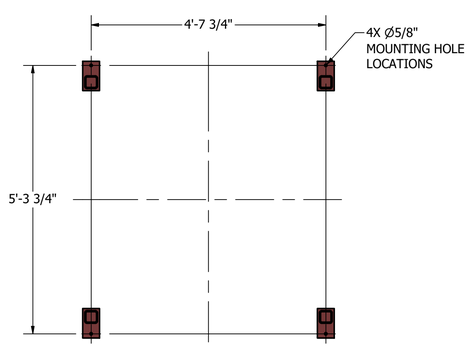

SECTION A-A

NOTES:
1. ESTIMATED WEIGHT = 2,800LBS

PRIME SUPPORT FRAME WITH ONE COAT
OF RUST INHIBITING PRIMER AND APPLY
ONE TOP COAT OF GRAY EXTERIOR ENAMEL.

TOLERANCE LEGEND (UNLESS NOTED)						FUEL TECH™ Technologies to enable clean efficient energy	APPROVED BY: K.KRAUSE
							CHECKED BY: A. TOPACIO
.XX = ± .03"							DRAWN BY: D. GHILARDI
.XXX = ± .010"						FUEL TECH, INC. 27601 BELLA VISTA PKWY, WARRENVILLE, IL 60555	
FRACTIONS = ± 1/8"	1	1/3/23	ISSUE FOR FABRICATION	DG	AT	UC DAVIS MEDICAL CENTER	DATE: 8/16/22
ANGLES = ± 3°	0	8/16/22	ADDED LOAD TABLE	DG	AT		SCALE: NONE SIZE: D
CUSTOMER TIE - INS = ± 1/4"	NO.	DATE	REVISIONS	DRAWN BY	CHECKED BY	ULTRA SYSTEM DECOMPOSITION CHAMBER AND SUPPORT STRUCTURE GENERAL ARRANGEMENT	DRAWING NO. 1294P-M04-10-GA-R1